REFERENCE TRANSLATION

English translation of the readable source. Original numerical values, product identifiers and source anomalies are retained. Original signatures and seals are available in the linked source document.

VID product catalogue

Original document

FACTORY ORDER CODES

Зел — Green

Кр — Red

Бел — White

Син — Blue

Желт — Yellow

Черн — Black

НО — Normally open contact (NO)

НЗ — Normally closed contact (NC)

Photo inscriptions (source pages 7, 36): page 94

VID Company LLC

Marine electrical equipment

Marine electrical distribution equipment

CATALOGUE

2025

VID Company LLC

603163, Nizhny Novgorod, Grebnoy Kanal Embankment, bldg. 6
Tel. (831) 435-18-25, +7(939) 801-30-78
www.vidnn.ru
info.vid@yandex.ru
avk33@yandex.ru

VID Company LLC was founded in 2006. The purpose of establishing the company was to provide services in the field of river cargo transportation and ship repair.

Today, VID Company LLC develops design and engineering documentation and manufactures shipboard power distribution equipment, control and automation systems, as well as shipboard LED luminaires and small sealed equipment.

From 2006 to 2025, more than 300 shipsets of power distribution equipment for civilian vessels and Navy ships were manufactured and supplied to shipyards.

The equipment is supplied with military acceptance (VP), certificates of the Russian Maritime Register of Shipping (RMRS) and the Russian Classification Society (RKO).

Since 2014, the enterprise has had VP acceptance. The enterprise holds certificates of recognition: - RMRS certificate of compliance of the enterprise for the development of technical documentation, installation and commissioning works for electrical equipment and automation equipment (including manufacture of shipboard power distribution equipment);

- RKO Recognition Certificate for Design (development of technical documentation), manufacture and repair of marine electrical distribution equipment, installation and commissioning work for marine electrical equipment, ship automation, ship fire detection alarm systems, automation and control systems for ship technical equipment.

The production facilities are located in an owned building (2,800 sq. m.) and include:

- electrical assembly workshop with equipment and tools for manufacturing marine electrical equipment (electrical, hydraulic, hand tools, measuring instruments, test bench, load device);

- design department; - machining workshop with machine tools; - component warehouse, finished product warehouse. The Company has its own quay wall, enabling products to be shipped by water transport.



The management and quality system is certified for compliance with GOST RV 0015-002-2012 and GOST ISO 9001-2011. In 2017, specialists of JSC “United Shipbuilding Corporation” conducted an audit to assess the enterprise’s production capabilities to manufacture and supply shipboard component equipment of the required quality and within the established deadlines. Based on the audit results, the enterprise was assigned Category A (an enterprise with a low degree of risk).

The assembly workshop is certified by ABB LLC as a workshop for assembling power distribution equipment rated up to 4000 A; personnel have undergone training and hold the following ABB LLC certificates:

- Design and assembly of electrical distribution equipment. - ABB programmable logic controllers. Products and services provided: 1.Development of design and engineering documentation. 2.Manufacture of static semiconductor converters for direct and alternating current.

3.Manufacture of electrical distribution equipment. 4.Manufacture of navigation consoles and control consoles. 5.Development and manufacture of automation systems using programmable logic controllers.

6. Development and manufacture of automation systems using discrete components (operating temperature from -50 deg. to +55 deg.)

7. Commissioning and testing. The above equipment has Type Approval Certificates from RMRS and RKO, and VP acceptance.

The enterprise manufactures the full range of power distribution equipment: from junction boxes to main switchboards and control consoles.

Acceptance tests are conducted using in-house equipment in accordance with documentation agreed with the Classification Society. Automation commissioning and adjustment are performed on a test bench with generators and load connected, which makes it possible to configure parallel operation of generators, as well as all types of interlocks, and deliver fully adjusted equipment to the vessel.

Contents:

Contacts	1
About the company	2
Contents	4
Junction boxes	6
КСП-67-ОМ1	7
КСП-55-ОМ3	8
КСП-44-ОМ3	9
КСМ-56-ОМ1	10
Metal junction boxes	11
ЯСМ-12-66-ОМ1	12
ЯСМ-20-66-ОМ1	13
ЯСМ-30-66-ОМ1	14
ЯСМ-40-66-ОМ1	15
ЯСМ-56-66-ОМ1	16
Plug-in transformers	17
ШТПО-220/12, 24, 36-66-ОМ1	18
Push-button stations	19
Description	20
ПКП series control and signalling station	21
2ПКП series control and signalling station	23
3ПКП series control and signalling station	25
Station examples	29
Custom push-button and control stations	35
Cam switches	36
СПВ2-16-1-67-ОМ1	37
СПВ2-16-2-67-ОМ1	38
СПВ2-16-3-67-ОМ1	39
СПВ2-16-4-67-ОМ1	40
СПВ3-16-2-67-ОМ1	41
СПВ3-16-3-67-ОМ1	42
СПВ4-16-2-67-ОМ1	43
СПВ4-16-3-67-ОМ1	44
Cam switches	45
СПП2-16/Н2-3-67-ОМ1	46
СПП2-16/Н3-4-67-ОМ1	47
СПП3-16/Н2-3-67-ОМ1	48
СПП3-16/Н3-4-67-ОМ1	49
СПП4-16/Н2-3-67-ОМ1	50
Cabin switches and sockets	51
Single-rocker flush-mounted switch	52
Single-rocker surface-mounted switch	53
Double-rocker flush-mounted switch	54
Single flush-mounted socket	55
Double flush-mounted socket	56
Single surface-mounted socket	57
Double surface-mounted socket	58

Contents:

Junction boxes with protective unit	59
Description	60
КСЗБ junction box with protective unit	61
Power boxes with protection unit	62
Description	63
ЯСЗБ power box with protective unit	64
EMI suppression filters	65
ФЕ-110-380Т interference suppression filter	66
Electromagnetic starters	67
Description, main parameters	68
Rated currents	69
Overall and mounting dimensions	70
Designation structure	71
AC uninterruptible power supplies	72
Description	73
Main parameters	74
General views	75
Connection diagrams	79
DC uninterruptible power supplies	80
Description	81
Main parameters	82
General views	83
Connection diagrams	87
Media Server	88
Description, main parameters	89
Connection diagrams	90
Appendices	
Appendix 1. Starters. Electrical circuit diagrams.	П1/1

Junction boxes
Metal junction boxes
Plug-in transformers
Push-button stations
Cam switches
Cam changeover switches
Cabin switches and sockets
Junction boxes with protection unit
Power boxes with protection unit
Interference suppression filters
Electromagnetic starters
AC UPS
DC UPS
Media server

Junction boxes

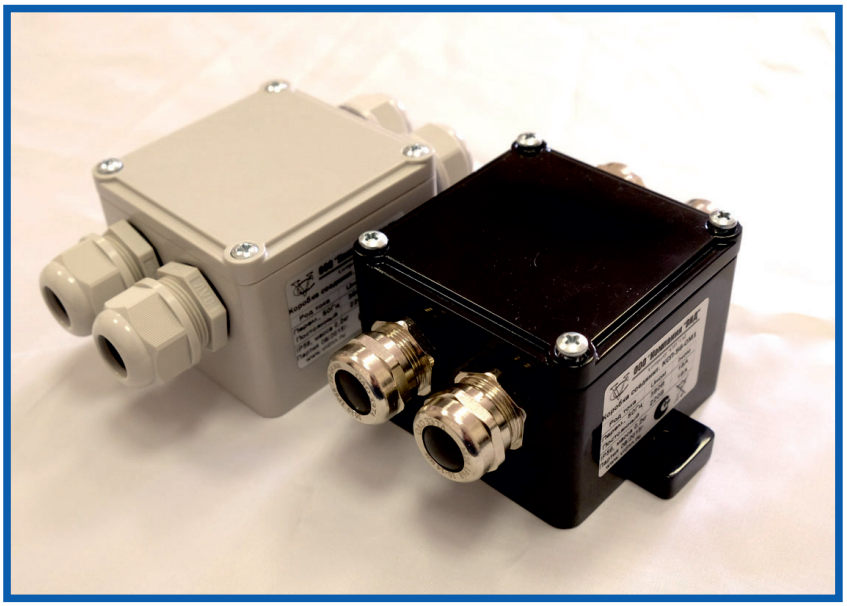

Product photo inscriptions: see the translation key

Junction box КСП-67-ОМ1

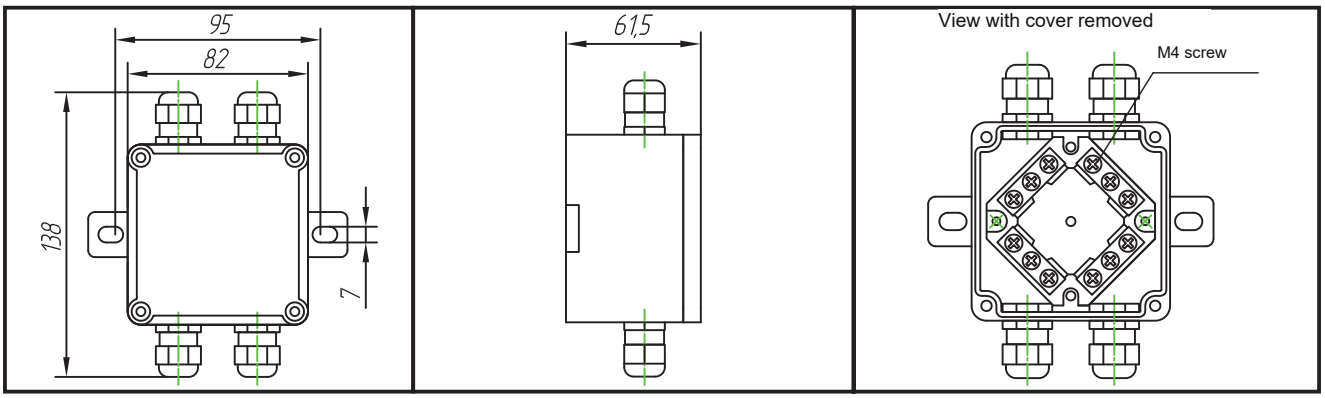

Description: Junction box made of impact-resistant, glass-fibre-reinforced thermoplastic, resistant to solar radiation and flame-retardant. Intended for installation in DC and AC circuits of lighting, broadcasting, signalling and monitoring networks. OM climatic version, installation category 1, IP67 degree of protection, for installation on open decks (including vessels with unrestricted service area), as well as in indoor damp and dry spaces.

	КСП-67-ОМ1
Technical documentation (RMRS, RRR acceptance)	ТУ БКЦ-003-2009
Technical documentation (VP acceptance)	ТУ БКЦ-003В
Degree of protection	IP67
Flammability category	UL94 V0
Auto-ignition temperature	960°C
Enclosure material	thermoplastic
Cable gland material	brass
Number of cable glands	4
Cable diameter, mm	8-16
Terminal block	4 poles, 3 terminals, 2.5 mm².
	Connect no more than two conductors with a cross-section of 2.5 mm² to the terminal.
Terminal lug type	Ring
Voltage, V:	
- alternating current	380
- direct current	220
Rated current, A	16
Mass, kg	0,38
Manufacture with an external M4 grounding screw is possible. Manufacture with different numbers of cable entries is possible: 2, 3, 4. Manufacture with a cable entry of a different diameter is possible (6-12, 10-14, 8-16, 13-18 mm). Specify when ordering: КСП-67-ОМ1 with an external grounding screw, cable entry diameter 6–12 mm.	

Supply with acceptance:
- RMRS
- RRR
- VP

Junction box КСП-55-ОМ3

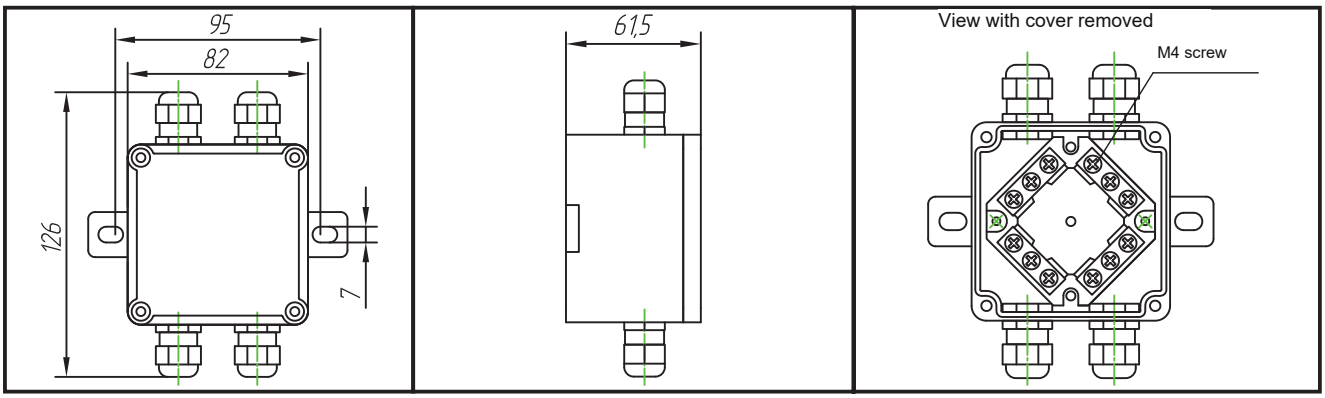

Description: Junction box made of impact-resistant, fiberglass-reinforced, flame-retardant thermoplastic. Intended for installation in DC and AC circuits, lighting, broadcasting, signalling and control networks. OM climatic version, placement category 3, for installation in enclosed damp and dry spaces.

	КСП-55-ОМ3
Technical documentation (RMRS, RRR acceptance)	ТУ БКЦ-003-2009
Technical documentation (VP acceptance)	ТУ БКЦ-003В
Degree of protection	IP55
Flammability category	UL94 V0
Auto-ignition temperature	960°C
Enclosure material	thermoplastic
Cable gland material	thermoplastic
Number of cable glands	4
Cable diameter, mm	10-14
Terminal block	4 poles, 3 terminals, 2.5 mm².
	Connect no more than two conductors with a cross-section of 2.5 mm² to the terminal.
Terminal lug type	Ring
Voltage, V:	
- alternating current	380
- direct current	220
Rated current, A	16
Mass, kg	0,23
Manufacture with an external M4 grounding screw is possible. Manufacture with different numbers of cable entries is possible: 2, 3, 4. Manufacture with a cable entry of a different diameter is possible (6-12, 10-14, 8-16, 13-18 mm). To be specified when ordering: КСП-55-ОМ3 with external grounding screw, cable entry diameter 6–12 mm.	

Supply with acceptance:
- RMRS
- RRR
- VP

Junction box КСП-44-ОМ3

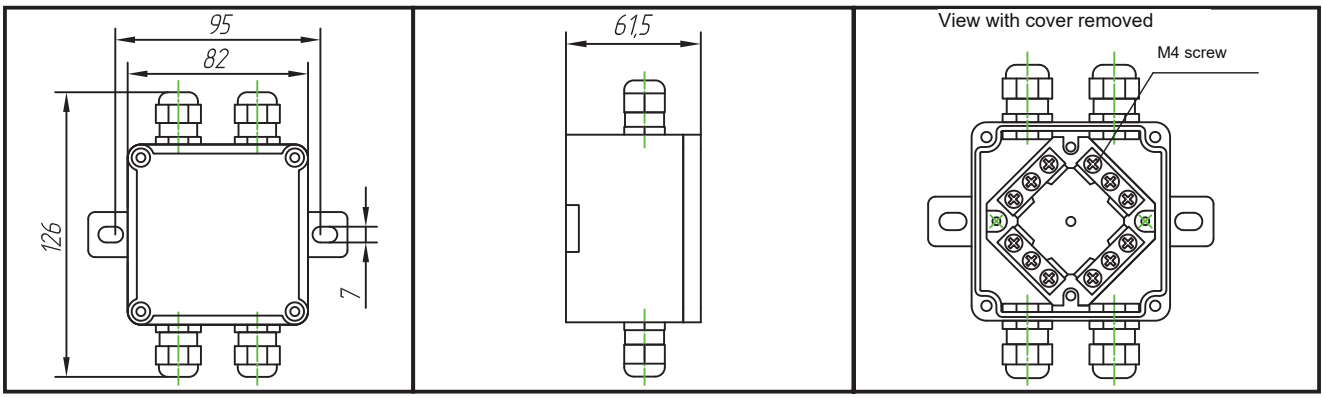

Description: Junction box made of impact-resistant, fiberglass-reinforced, flame-retardant thermoplastic. Intended for installation in DC and AC circuits, lighting, broadcasting, signalling and control networks. OM climatic version, placement category 3, for installation in enclosed damp and dry spaces.

	КСП-44-ОМ3
Technical documentation (RMRS, RRR acceptance)	ТУ БКЦ-003-2009
Technical documentation (VP acceptance)	ТУ БКЦ-003В
Degree of protection	IP44
Flammability category	UL94 V0
Auto-ignition temperature	960°C
Enclosure material	thermoplastic
Cable gland material	thermoplastic
Number of cable glands	4
Cable diameter, mm	10-14
Terminal block	4 poles, 3 terminals, 2.5 mm².
	Connect no more than two conductors with a cross-section of 2.5 mm² to the terminal.
Terminal lug type	Ring
Voltage, V:	
- alternating current	380
- direct current	220
Rated current, A	16
Mass, kg	0,23
Manufacture with an external M4 grounding screw is possible. Manufacture with different numbers of cable entries is possible: 2, 3, 4. Manufacture with a cable entry of a different diameter is possible (6-12, 10-14, 8-16, 13-18 mm). To be specified when ordering: КСП-44-ОМ3 with external grounding screw, cable entry diameter 6–12 mm.	

Supply with acceptance:
- RMRS
- RRR
- VP

KCM-56-OM1 Junction Box

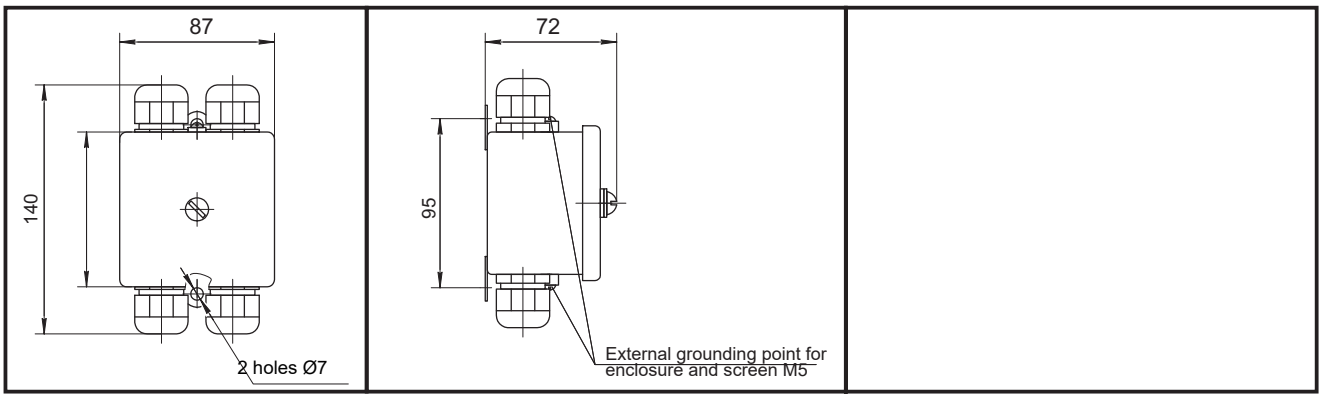

Description: Junction box made of metal (steel, stainless steel). Designed for installation in DC and AC circuits, lighting, broadcasting, signalling and control networks. Climate version OM, installation category 1, degree of protection IP56, for installation on open decks (including vessels operating without navigation area restrictions), as well as in internal damp and dry spaces.

	KCM-56-OM1	KCM-56-OM1 stainless steel
Degree of protection	IP56	IP56
Enclosure material*	steel	stainless steel*
Cable gland material	thermoplastic	brass
Number of cable glands	4	4
Cable diameter, mm	8-16	8-16
Terminal block	4 poles, 3 terminals, 2.5 mm²	4 poles, 3 terminals, 2.5 sq. mm.
	Connect no more than two 2.5 mm² conductors to each terminal.	
Grounding screw	2 inside, 2 outside	2 inside, 2 outside
Voltage, V:		
- alternating current	380	380
- direct current	220	220
Rated current, A	16	16
Mass, kg	0,52	0,52

*Note:
1. For open decks of ships operating in marine conditions, use a stainless-steel enclosure (specify when ordering).
2. Other cable-entry diameters are available (6–12, 10–14, 8–16, 13–18 mm). Specify when ordering:

KCM-56-OM1, stainless-steel enclosure, cable entry 6–12 mm.

Supply with acceptance:
- RMRS - RRR - VP

Junction boxes
Metal junction boxes
Plug-in transformers
Push-button stations
Cam switches
Cam changeover switches
Cabin switches and sockets
Junction boxes with protection unit
Power boxes with protection unit
Interference suppression filters
Electromagnetic starters
AC UPS
DC UPS
Media server

Metal junction boxes

Junction box ЯСМ-12-66-ОМ1

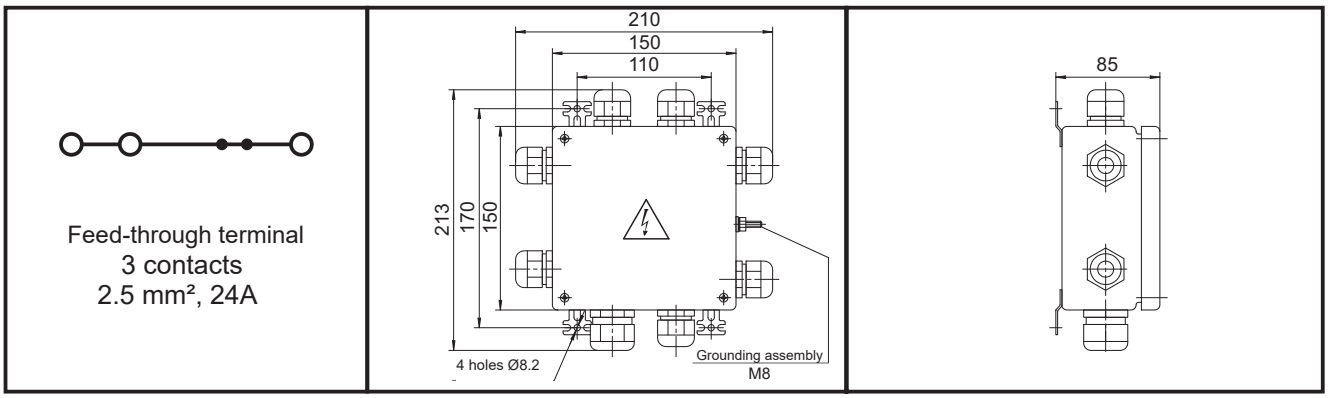

Description: Metal junction box (steel, stainless steel). Intended for installation in DC and AC circuits of lighting, signalling and monitoring networks. OM climatic version, installation category 1, IP66 degree of protection, for installation on open decks (including vessels with unrestricted service area), as well as in indoor damp and dry spaces.

	ЯСМ12-66-ОМ1
Technical documentation (RMRS, RRR acceptance)	ТУ БКЦ-004-2009
Technical documentation (VP acceptance)	ТУ БКЦ-004В
Degree of protection	IP66
Enclosure material*	Steel (stainless steel)*
Number of cable glands	1 pc. - M32; 7 pcs. - M25
Cable diameter, mm	1 pc.: 15-21 mm, 7 pcs.: 8-16 mm.
Feed-through terminals (3 contacts)	12 pcs., 2.5 mm². Connection to adjacent terminals is possible using plug-in jumpers
Grounding screw	1 external, 1 internal
PE busbar	100 A
Voltage, V:	
- alternating current	690
- direct current	660
Rated current, A	24
Mass, kg	2,1

*Note:
1. For open decks of vessels operated under marine conditions, use an enclosure made of stainless steel (to be specified when ordering).
2. Upon request, the internal circuit can be configured using plug-in jumpers.

Supply with acceptance:
- RMRS
- RRR
- VP

Junction box ЯСМ-20-66-ОМ1

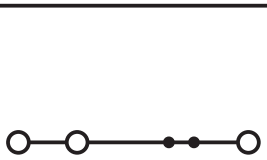

Feed-through terminal
3 contacts
2.5 mm², 24A

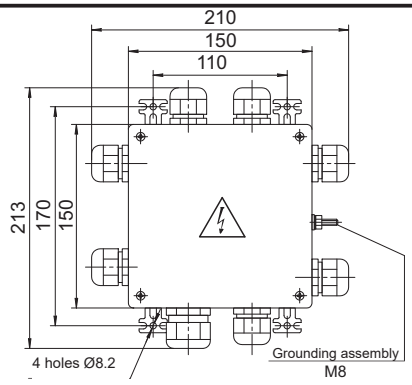

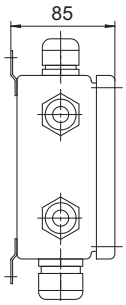

Description: Metal junction box (steel, stainless steel). Intended for installation in DC and AC circuits of lighting, signalling and monitoring networks. OM climatic version, installation category 1, IP66 degree of protection, for installation on open decks (including vessels with unrestricted service area), as well as in indoor damp and dry spaces.

	ЯСМ20-66-ОМ1
Technical documentation (RMRS, RRR acceptance)	ТУ БКЦ-004-2009
Technical documentation (VP acceptance)	ТУ БКЦ-004В
Degree of protection	IP66
Enclosure material*	Steel (stainless steel)*
Number of cable glands	1 pc. - M32; 7 pcs. - M25
Cable diameter, mm	1 pc.: 15-21 mm, 7 pcs.: 8-16 mm.
Feed-through terminals (3 contacts)	20 pcs., 2.5 mm². Connection to adjacent terminals is possible using plug-in jumpers
Grounding screw	1 external, 1 internal
PE busbar	100 A
Voltage, V:	
- alternating current	690
- direct current	660
Rated current, A	24
Mass, kg	2,22

*Note:
1. For open decks of vessels operated under marine conditions, use an enclosure made of stainless steel (to be specified when ordering).
2. Upon request, the internal circuit can be configured using plug-in jumpers.

Supply with acceptance:
- RMRS
- RRR
- VP

Junction box ЯСМ-30-66-ОМ1

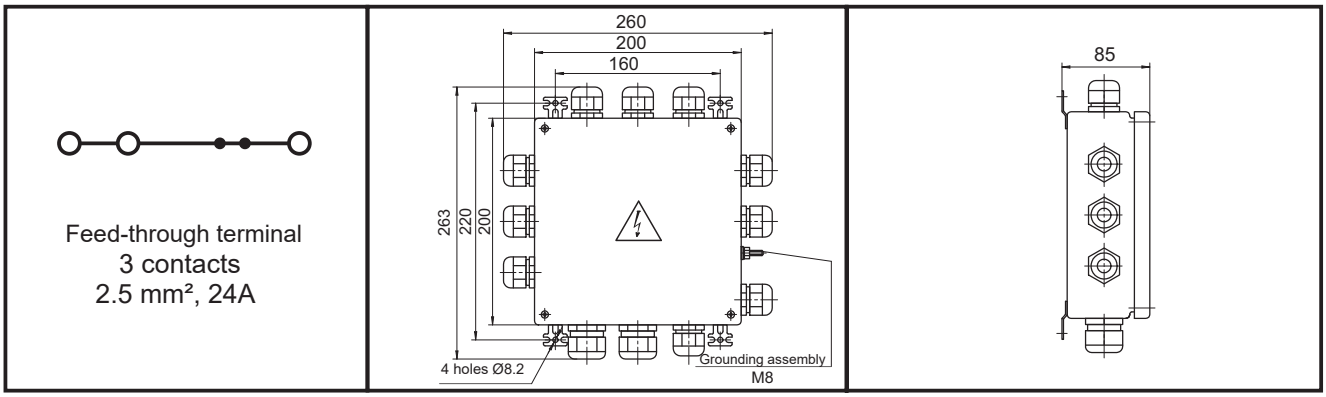

Description: Metal junction box (steel, stainless steel). Intended for installation in DC and AC circuits of lighting, signalling and monitoring networks. OM climatic version, installation category 1, IP66 degree of protection, for installation on open decks (including vessels with unrestricted service area), as well as in indoor damp and dry spaces.

	ЯСМ30-66-ОМ1
Technical documentation (RMRS, RRR acceptance)	ТУ БКЦ-004-2009
Technical documentation (VP acceptance)	ТУ БКЦ-004В
Degree of protection	IP66
Enclosure material*	Steel (stainless steel)*
Number of cable glands	2 pcs. - M32; 10 pcs. - M25
Cable diameter, mm	2 pcs.: 12-21 mm, 10 pcs.: 8-16 mm.
Feed-through terminals (3 contacts)	30 pcs., 2.5 mm². Connection to adjacent terminals is possible using plug-in jumpers
Grounding screw	1 external, 1 internal
PE busbar	100 A, 2 pcs.
Voltage, V:	
- alternating current	690
- direct current	660
Rated current, A	24
Mass, kg	3,64

*Note:
1. For open decks of vessels operated under marine conditions, use an enclosure made of stainless steel (to be specified when ordering).
2. Upon request, the internal circuit can be configured using plug-in jumpers.

Supply with acceptance:
- RMRS
- RRR
- VP

Junction box ЯСМ-40-66-ОМ1

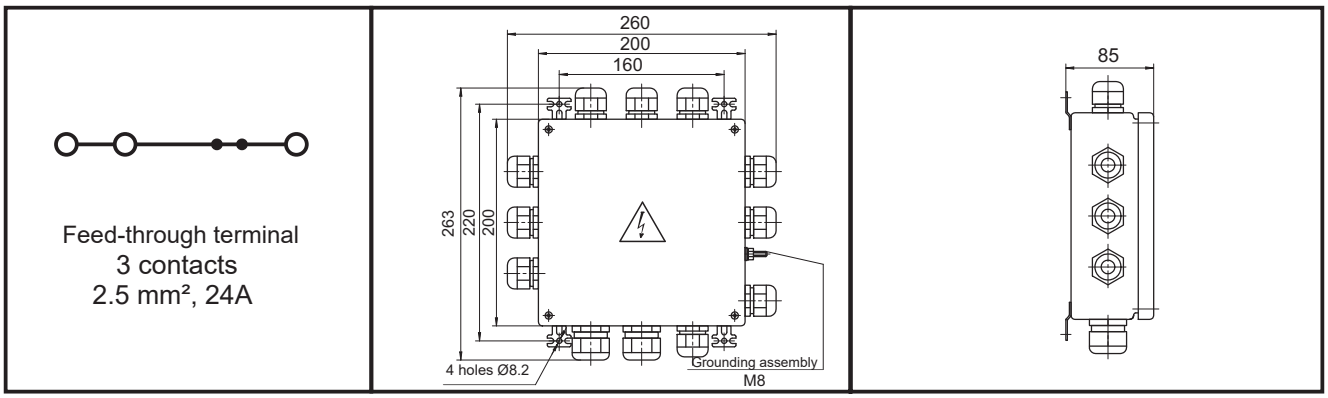

Description: Metal junction box (steel, stainless steel). Intended for installation in DC and AC circuits of lighting, signalling and monitoring networks. OM climatic version, installation category 1, IP66 degree of protection, for installation on open decks (including vessels with unrestricted service area), as well as in indoor damp and dry spaces.

	ЯСМ40-66-ОМ1
Technical documentation (RMRS, RRR acceptance)	ТУ БКЦ-004-2009
Technical documentation (VP acceptance)	ТУ БКЦ-004В
Degree of protection	IP66
Enclosure material*	Steel (stainless steel)*
Number of cable glands	2 pcs. - M32; 10 pcs. - M25
Cable diameter, mm	2 pcs.: 15-21 mm, 10 pcs.: 8-16 mm.
Feed-through terminals (3 contacts)	40 pcs., 2.5 mm². Connection to adjacent terminals is possible using plug-in jumpers
Grounding screw	1 external, 1 internal
PE busbar	100 A, 2 pcs.
Voltage, V:	
- alternating current	690
- direct current	660
Rated current, A	24
Mass, kg	3,78

*Note:
1. For open decks of vessels operated under marine conditions, use an enclosure made of stainless steel (to be specified when ordering).
2. Upon request, the internal circuit can be configured using plug-in jumpers.

Supply with acceptance:
- RMRS
- RRR
- VP

Junction box ЯСМ-56-66-ОМ1

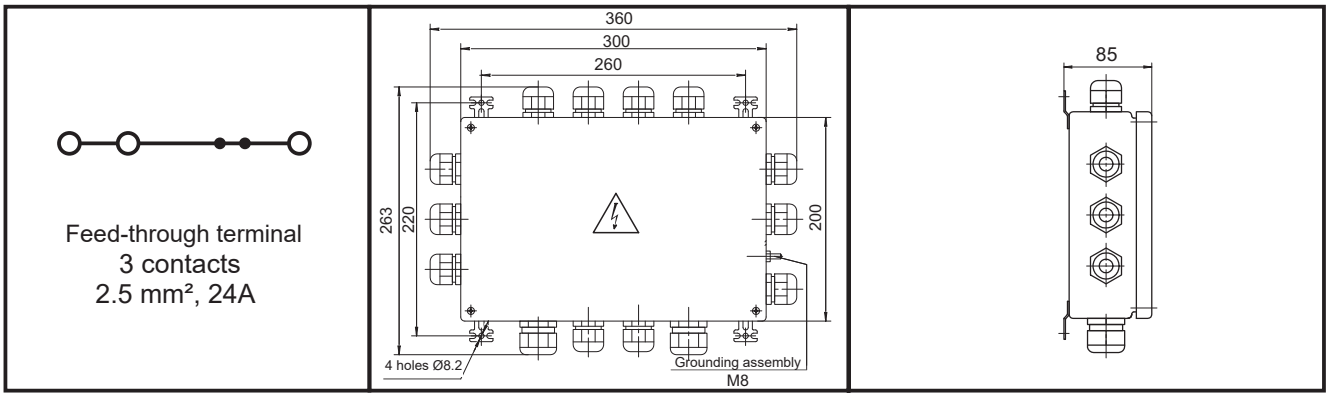

Description: Metal junction box (steel, stainless steel). Intended for installation in DC and AC circuits of lighting, signalling and monitoring networks. OM climatic version, installation category 1, IP66 degree of protection, for installation on open decks (including vessels with unrestricted service area), as well as in indoor damp and dry spaces.

	ЯСМ56-66-ОМ1
Technical documentation (RMRS, RRR acceptance)	ТУ БКЦ-004-2009
Technical documentation (VP acceptance)	ТУ БКЦ-004В
Degree of protection	IP66
Enclosure material*	Steel (stainless steel)*
Number of cable glands	2 pcs. - M32; 10 pcs. - M25
Cable diameter, mm	2 pcs.: 15-21 mm, 12 pcs.: 10-17 mm.
Feed-through terminals (3 contacts)	56 pcs., 2.5 mm². Connection to adjacent terminals is possible using plug-in jumpers
Grounding screw	1 external, 1 internal
PE busbar	100 A, 2 pcs.
Voltage, V:	
- alternating current	690
- direct current	660
Rated current, A	24
Mass, kg	5,07

*Note:
1. For open decks of vessels operated under marine conditions, use an enclosure made of stainless steel (to be specified when ordering).
2. Upon request, the internal circuit can be configured using plug-in jumpers.

Supply with acceptance:
- RMRS
- RRR
- VP

Junction boxes
Metal junction boxes
Plug-in transformers
Push-button stations
Cam switches
Cam changeover switches
Cabin switches and sockets
Junction boxes with protection unit
Power boxes with protection unit
Interference suppression filters
Electromagnetic starters
AC UPS
DC UPS
Media server

Plug-in transformers for portable lighting

Plug transformer for portable lighting ШТПО

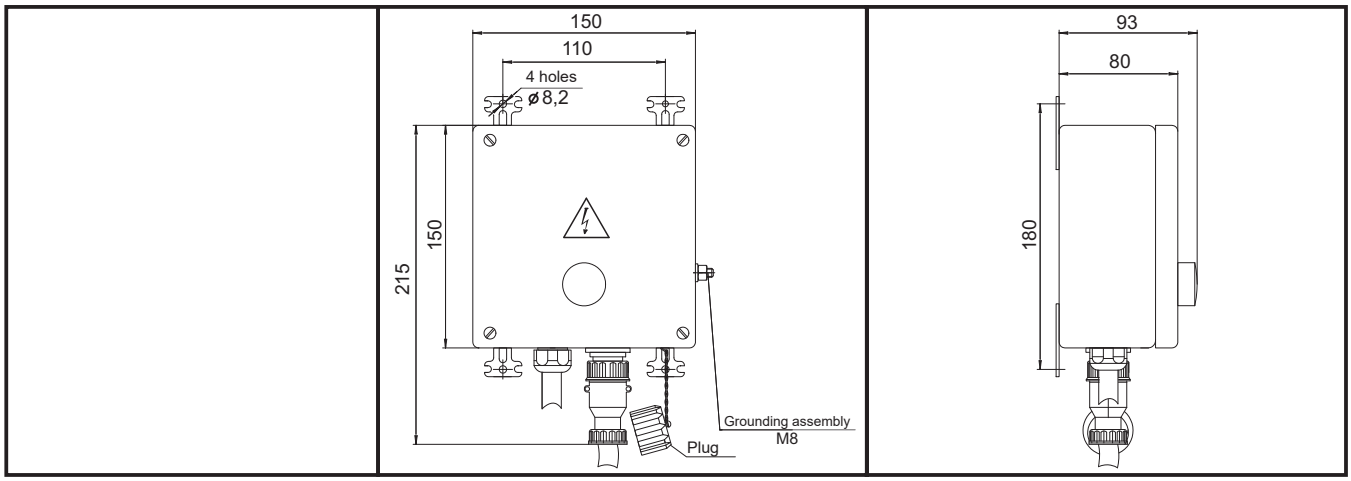

Description: Plug-in transformer for supplying portable lighting fixtures with 12, 24 or 36 V incandescent lamps rated at 40 W from a 220 V shipboard network. OM climatic version, placement category 1, for installation in enclosed spaces and on open deck, including vessels of unrestricted navigation area.

Note: for open decks of vessels operated under marine conditions, use a stainless steel enclosure (to be specified when ordering).
Technical documentation: RMRS, RRR acceptance - ТУ БКЦ-005-2009;
VP acceptance - ТУ БКЦ-005В.

Main parameters:

Transformer winding	Voltage, V	Frequency, Hz	Power, VA	Cable gland		Degree of protection	Enclosure material	Mass, kg
				Qty., pcs.	Cable outer diameter, mm			
Primary	220	50	63	1	from 10 up to 17	IP66	Metal	2,9
Secondary	12, 24, 36	50						

Product designation structure

ШТПО–220/ X – 66 – ОМ1

- Type
- Output voltage:
  - 12 - 12 V, 50 Hz
  - 24 - 24 V, 50 Hz
  - 36 - 36 V, 50 Hz
- Index for degree of protection:
  - 66 – IP66
- ОМ climatic version, installation category 1

Supply with acceptance:
- RMRS
- RRR
- VP

Junction boxes
Metal junction boxes
Plug-in transformers
Push-button stations
Cam switches
Cam changeover switches
Cabin switches and sockets
Junction boxes with protection unit
Power boxes with protection unit
Interference suppression filters
Electromagnetic starters
AC UPS
DC UPS
Media server

ПКП-series control and signaling stations

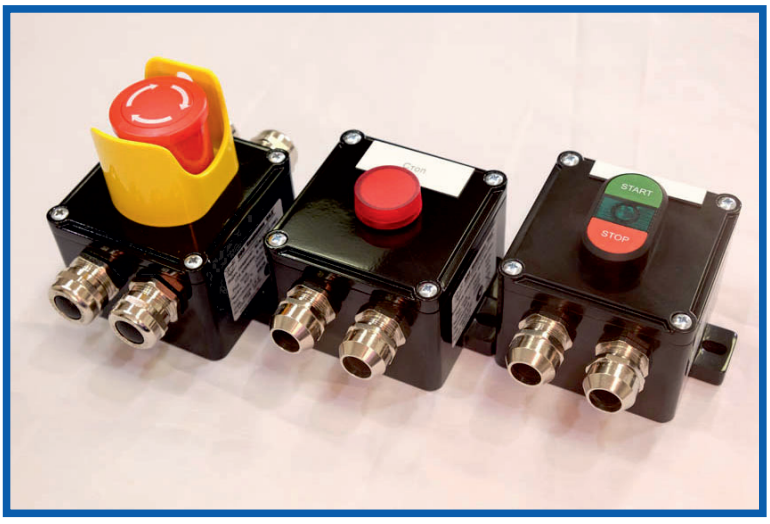

Control and signaling stations, ПКП series

Description:

Control and signaling stations are intended for use both on vessels and in other electrical installations. They may be used in electrical networks with DC voltage up to 220 V and AC voltage up to 400 V at a frequency of 50 Hz.

The products offer extensive functionality: installation of visual and audible signalling, as well as various control elements—pushbuttons, selector switches, toggle switches, joysticks—is possible. If you require a multifunctional solution, we also offer combined stations: double and triple.

The products have OM climatic version, installation category 1 in accordance with GOST 15150-69, degree of protection IP66; when installed in a buzzer station: IP65; with a cam switch or selector switch: IP67 in accordance with GOST 14254-96, and are designed for installation on the open deck of ships operating in an unrestricted navigation area, as well as in internal damp and dry spaces.

In terms of resistance to mechanical and climatic impacts, all products comply with the requirements of GOST 15150-69 and the Rules of RRR and RS.

The products are fitted with sealed cable glands and sealing elements for cables with a diameter of 8 to 16 mm. The required number of cable glands is specified when ordering the product.

Product dimensions:

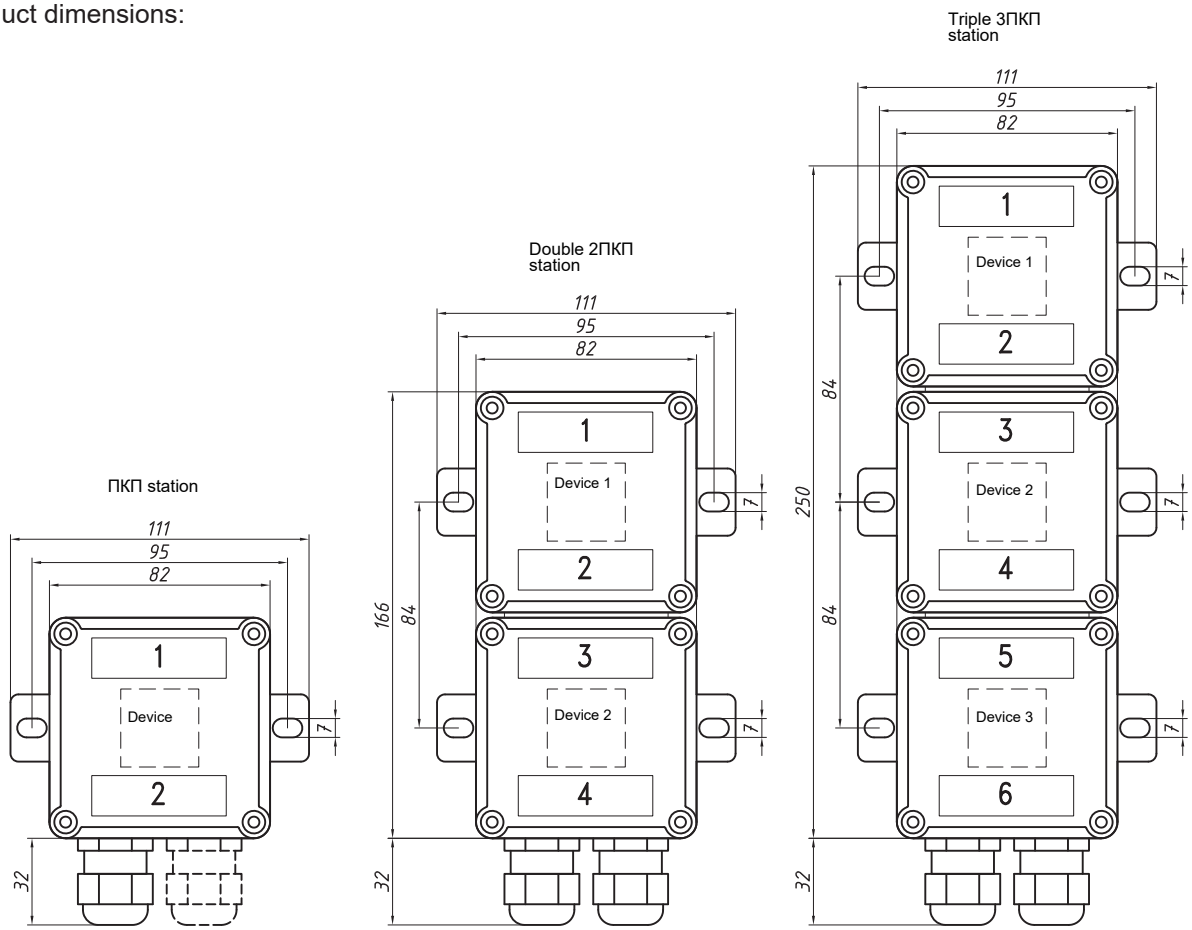

Supply with acceptance:
- RMRS - RRR

Control and indication station, ПКП series.

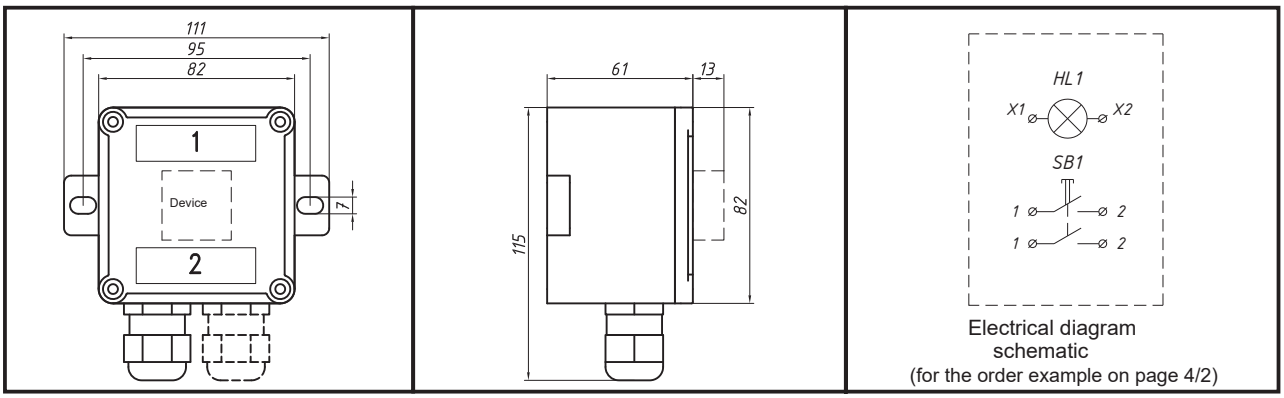

Electrical diagram schematic
(for the order example on page 4/2)

Description: Push-button station made of impact-resistant, fiberglass-reinforced thermoplastic, resistant to solar radiation and flame-retardant.

Designed for switching AC control circuits up to 400 V at 50 Hz and DC circuits up to 220 V and/or providing local or remote indication signals.

*OM climatic version, installation category 1 per GOST 15150-69. Degree of protection: IP66; IP65 when fitted with a buzzer; IP67 when fitted with a cam switch or selector, per GOST 14254-96. Suitable for open decks and indoor wet and dry spaces.

	ПКП
Technical documentation	TU VC-013-2016
Degree of protection*	IP66, IP65, IP67
Flammability category	UL94 V0
Auto-ignition temperature	960°C
Enclosure material	thermoplastic
Cable gland material	brass
Number of cable glands	1-4
Cable diameter, mm	8-16
Voltage, V:	
- alternating current	400
- direct current	220
Mass, kg	0,25

The list of installed devices is on page 4/7.

Supply with acceptance:
- RMRS
- RRR

Junction boxes
Metal junction boxes
Plug transformers
Push-button stations
Cam switches
Cam selector switches
Cabin switches and sockets
Junction boxes with protection unit
Power boxes with protection unit
Interference suppression filters
Electromagnetic starters
AC UPS
DC UPS
Media server

Control and indication station, ПКП series.

Order table.

ПКП	X	X	X	X	X	X
Plastic station	Device *			Lamp		Cable glands
	Designation	Contacts	Color	Voltage	Color	
ПКП	see sheet 8-11	10	Зел	~380 V	Зел	1
		01	Кр	~220 V	Кр	2
		11	Бел	=24 V	Бел	3
		20	Син		Син	4
		02	Желт		Желт	
		21	Черн			
		12				
		22				
		30				
		03				
		31				
		13				
		40				
		04				

Contact description	
10	1НО
01	1НЗ
11	1НО+1НЗ
20	2НО
02	2НЗ
21	2НО+1НЗ
12	1НО+2НЗ
22	2НО+2НЗ
30	3НО
03	3НЗ
31	3НО+1НЗ
13	1НЗ+3НО
40	4НО
04	4НЗ

NO - normally open contact

NC - normally closed contact

* the total number of contacts in each device cannot exceed four.

Specify 00 in the order number for unused elements.

Example: Station ПКП-К320Кр-24Кр-2
Station with a red non-latching push-button protected against accidental actuation, with two NO contacts, with red 24V lamp, with two cable glands.
Text of inscriptions: 1 - "_____"; 2 - "_____".

The list of installed devices is on page 4/7.

Supply with acceptance:
- RMRS
- RRR

Junction boxes
Metal junction boxes
Plug transformers
Push-button stations
Cam switches
Cam selector switches
Cabin switches and sockets
Junction boxes with protection unit
Power boxes with protection unit
Interference suppression filters
Electromagnetic starters
AC UPS
DC UPS
Media server

Control and indication station, 2ПКП series.

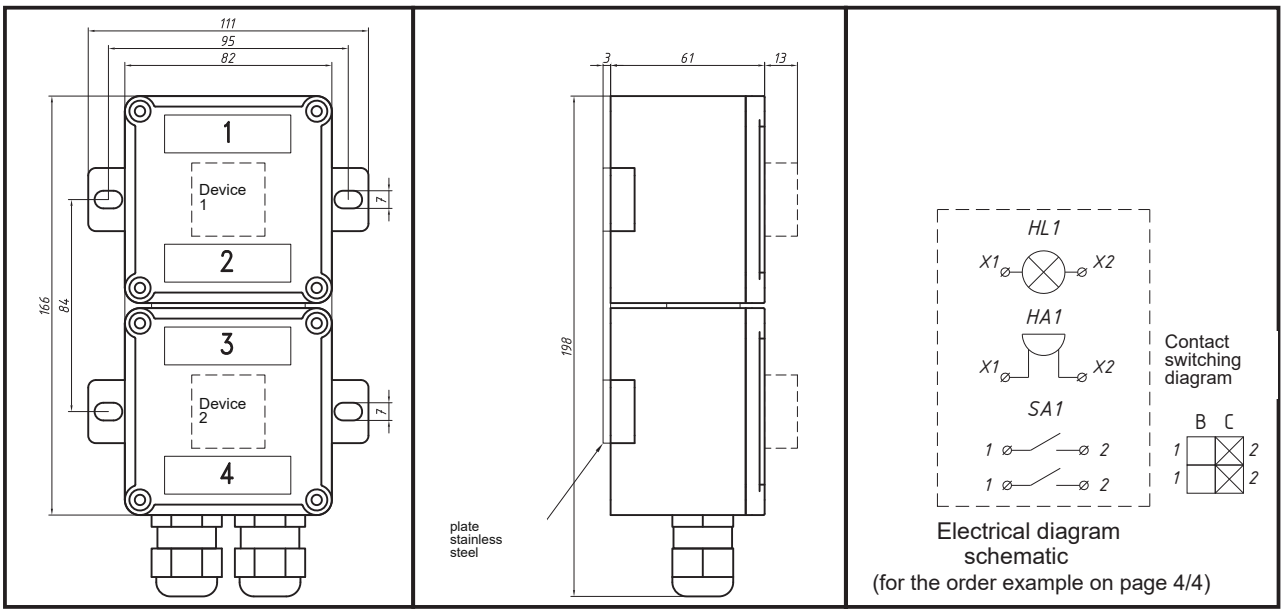

Electrical diagram schematic
(for the order example on page 4/4)

Description: Double push-button station made of impact-resistant, fiberglass-reinforced thermoplastic, resistant to solar radiation and flame-retardant.

Designed for switching AC control circuits up to 400 V at 50 Hz and DC circuits up to 220 V and/or providing local or remote indication signals.

*OM climatic version, installation category 1 per GOST 15150-69. Degree of protection: IP66; IP65 when fitted with a buzzer; IP67 when fitted with a cam switch or selector, per GOST 14254-96. Suitable for open decks and indoor wet and dry spaces.

	2ПКП
Technical documentation	TU VC-013-2016
Degree of protection*	IP66, IP65, IP67
Flammability category	UL94 V0
Auto-ignition temperature	960°C
Enclosure material	thermoplastic
Cable gland material	brass
Number of cable glands	1-4
Cable diameter, mm	8-16
Voltage, V:	
- alternating current	400
- direct current	220
Mass, kg	0,85

The list of installed devices is on page 4/7.

Supply with acceptance:
- RMRS
- RRR

Control and indication station, 2ПКП series.

Order table.

2ПКП	X	X	X	X	X	X	X	X	X	X	X	X
Double plastic station	Device 1 * (upper station)			Lamp 1 (upper station)		Device 2 * (lower station)			Lamp 2 (lower station)		Cable glands
	Designation	Contacts	Color	Voltage	Color	Designation	Contacts	Color	Voltage	Color	
2ПКП	see sheet 8-11	10	Зел	~380 V	Зел	see sheet 8-11	10	Зел	~380 V	Зел	1
		01	Кр	~220 V	Кр		01	Кр	~220 V	Кр	2
		11	Бел	=24 V	Бел		11	Бел	=24 V	Бел	3
		20	Син		Син		20	Син		Син	4
		02	Желт		Желт		02	Желт		Желт	
		21	Черн				21	Черн			
		12					12				
		22					22				
		30					30				
		03					03				
		31					31				
		13					13				
		40					40				
		04					04				

* the total number of contacts in each device cannot exceed four.

Specify 00 in the order number for unused elements.

Example: Station 2ПКП-3у230-00/ПДФ203ел-2203ел-2
Double station, with 230V buzzer; with two-position maintained selector switch (green) with two NO contacts, with a green 220V lamp; with two cable glands.
Text of inscriptions: 1 - "_____"; 2 - "_____"; 3 - "_____"; 4 - "_____".

The list of installed devices is on page 4/7.

Contact description	
10	1НО
01	1НЗ
11	1НО+1НЗ
20	2НО
02	2НЗ
21	2НО+1НЗ
12	1НО+2НЗ
22	2НО+2НЗ
30	3НО
03	3НЗ
31	3НО+1НЗ
13	1НЗ+3НО
40	4НО
04	4НЗ

NO - normally open contact
NC - normally closed contact

Supply with acceptance:
- RMRS
- RRR

Junction boxes
Metal junction boxes
Plug transformers
Push-button stations
Cam switches
Cam selector switches
Cabin switches and sockets
Junction boxes with protection unit
Power boxes with protection unit
Interference suppression filters
Electromagnetic starters
AC UPS
DC UPS
Media server

Control and indication station, 3ПКП series.

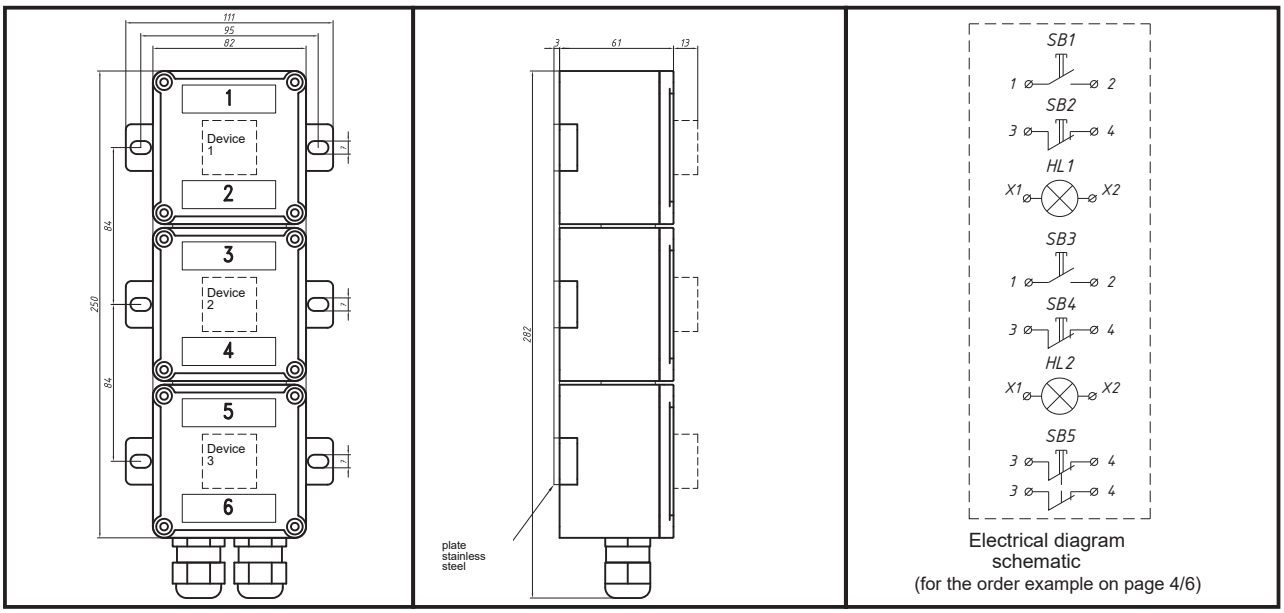

Electrical diagram schematic
(for the order example on page 4/6)

Description: Triple push-button station made of impact-resistant, fiberglass-reinforced thermoplastic, resistant to solar radiation and flame-retardant.

Designed for switching AC control circuits up to 400 V at 50 Hz and DC circuits up to 220 V and/or providing local or remote indication signals.

*OM climatic version, installation category 1 per GOST 15150-69. Degree of protection: IP66; IP65 when fitted with a buzzer; IP67 when fitted with a cam switch or selector, per GOST 14254-96. Suitable for open decks and indoor wet and dry spaces.

	3ПКП
Technical documentation	TU VC-013-2016
Degree of protection*	IP66, IP65, IP67
Flammability category	UL94 V0
Auto-ignition temperature	960°C
Enclosure material	thermoplastic
Cable gland material	brass
Number of cable glands	1-4
Cable diameter, mm	8-16
Voltage, V:	
- alternating current	400
- direct current	220
Mass, kg	1,20

The list of installed devices is on page 4/7.

Supply with acceptance:
- RMRS
- RRR

Control and indication station, ЗПКП series.

Order table.

ЗПКП	X	X	X	X	X	X	X	X	X	X	X	X	X	X	X	X	X	X
Triple plastic station	Device 1 * (upper station)			Lamp 1 (upper station)		Device 2 * (middle station)			Lamp 2 (middle station)		Device 3 * (lower station)			Lamp 3 (lower station)		Cable glands		
ЗПКП	Designation	Contacts	Color	Voltage	Color	Designation	Contacts	Color	Voltage	Color	Designation	Contacts	Color	Voltage	Color			
	see pp. 8–11	10	Зел	~380 V	Зел	see pp. 8–11	10	Зел	~380 V	Зел	see pp. 8–11	10	Зел	~380 V	Зел		1	
		01	Кр	~220 V	Кр		01	Кр	~220 V	Кр		01	Кр	~220 V	Кр		2	
		11	Бел	=24 V	Бел		11	Бел	=24 V	Бел		11	Бел	=24 V	Бел		3	
		20	Син		Син		20	Син		Син		20	Син		Син		4	
		02	Желт		Желт		02	Желт		Желт		02	Желт		Желт			
		21	Черн				21	Черн				21	Черн					
		12					12					12						
		22					22					22						
		30					30					30						
		03					03					03						
		31					31					31						
		13					13					13						
		40					40					40						
		04					04					04						

* the total number of contacts in each device cannot exceed four.

Specify 00 in the order number for unused elements.

Example: Station ЗПКП-КД11-00/КД11-2203ел/КА02-220Кр-2
Triple station, with double push-button with one NO and one NC contact;
with double push-button with one NO and one NC contact, with green 220V lamp;
with emergency stop push-button with two NC contacts, with red 220V lamp;
with two cable glands.
Text of inscriptions:
1 - "_____"; 2 - "_____"; 3 - "_____";
4 -"_____"; 5 - "_____"; 6 - "_____".

The list of installed devices is on page 4/7.

Contact description	
10	1НО
01	1НЗ
11	1НО+1НЗ
20	2НО
02	2НЗ
21	2НО+1НЗ
12	1НО+2НЗ
22	2НО+2НЗ
30	3НО
03	3НЗ
31	3НО+1НЗ
13	1НЗ+3НО
40	4НО
04	4НЗ

NO - normally open contact
NC - normally closed contact

Supply with acceptance:
- RMRS
- RRR

List of devices. Designation examples.

Name	Designation	Order code example	Breakdown	IP
Push-buttons				
Spring-return push-button	К	К113ел	Green spring-return push-button, with one NO and one NC contact	IP66
Maintained push-button	КФ	КФ113ел	Green maintained push-button, with one NO and one NC contact	IP66
Spring-return push-button with protection against accidental actuation	КЗ	КЗ113ел	Green spring-return push-button with protection against accidental actuation, with one NO and one NC contact	IP66
Maintained push-button with protection against accidental actuation	КЗФ	КЗФ113ел	Green maintained push-button with protection against accidental actuation, with one NO and one NC contact	IP66
Double push-buttons				
Double spring-return push-button	КД	КД22	Double spring-return push-button, with two NO and two NC contacts	IP66
Emergency stop push-buttons				
Emergency stop push-button, released by turning	КА	КА01	Red maintained emergency stop push-button, with one NC contact	IP66
Switches				
Two-position switch, spring-return	ПД	ПД11Черн	Black two-position spring-return switch, with one NO and one NC 	IP66
Two-position switch, maintained	ПДФ	ПДФ11Черн	Black two-position maintained switch, with one NO and one NC 	IP66
Three-position switch, spring-return	ПТ	ПТ11Черн	Black three-position switch, spring-return, with one NO and one NC contact 	IP66
Three-position switch, spring-return from A to B	ПТАВ	ПТАВ11Черн	Black three-position switch, spring-return from A to B, with one NO and one NC contact 	IP66
Three-position switch, spring-return from C to B	ПТСВ	ПТСВ11Черн	Black three-position switch, spring-return from C to B, with one NO and one NC contact 	IP66
Three-position switch, maintained	ПТФ	ПТФ11Черн	Black three-position switch, maintained, with one NO and one NC contact 	IP66
Key-operated switches*				
Two-position key-operated switch, spring-return	ПКД	ПКД11	Two-position key-operated switch, spring-return, with one NO and one NC contact 	IP66
Two-position key-operated switch, maintained	ПКДФ	ПКДФ11	Two-position key-operated switch, maintained, with one NO and one NC contact 	IP66
Three-position key-operated switch, spring-return	ПКТ	ПКТ11	Three-position key-operated switch, spring-return, with one NO and one NC contact 	IP66
Three-position key-operated switch, spring-return from A to B	ПКТАВ	ПКТАВ11	Three-position key-operated switch, spring-return from A to B, with one NO and one NC contact 	IP66
Three-position key-operated switch, spring-return from C to B	ПКТСВ	ПКТСВ11	Three-position key-operated switch, spring-return from C to B, with one NO and one NC contact 	IP66
Three-position key-operated switch, maintained	ПКТФ	ПКТФ11	Three-position key-operated switch, maintained, with one NO and one NC contact 	IP66

Junction boxes
Metal junction boxes
Plug-in transformers
Push-button stations
Cam switches
Cam changeover switches
Cabin switches and sockets
Junction boxes with protection unit
Power boxes with protection unit
Interference suppression filters
Electromagnetic starters
AC UPS
DC UPS
Media server

Supply with acceptance:
- RMRS - RRR

List of devices. Designation examples.

Name	Designation	Order code example	Breakdown	IP
Toggle switches*				
Two-position toggle switch, maintained	ТДФ	ТДФ11	Two-position toggle switch, maintained, with one NO and one NC contact 	IP66
Three-position toggle switch, spring-return	ТТ	ТТ11	Three-position toggle switch, spring-return, with one NO and one NC contact 	IP66
Three-position toggle switch, maintained	ТТФ	ТТФ11	Maintained 3-position toggle switch: 1 NO + 1 NC 	IP66
Joysticks*				
Two-position joystick, spring-return	ДД	ДД20	Two-position spring-return joystick, with two NO contacts 	IP66
Two-position joystick, maintained	ДДФ	ДДФ20	Two-position maintained joystick, with two NO contacts 	IP66
Four-position joystick, spring-return	ДЧ	ДЧ40	Four-position spring-return joystick, with four NO contacts 	IP66
Four-position joystick, maintained	ДЧФ	ДЧФ40	Four-position maintained joystick, with four NO contacts 	IP66
Four-position spring-return joystick, with interlock to prevent unauthorized switching	ДЧБ	ДЧБ40	Four-position spring-return joystick, with four NO contacts, with switching interlock 	IP66
Four-position maintained joystick, with interlock to prevent unauthorized switching	ДЧБФ	ДЧБФ40	Four-position maintained joystick, with four NO contacts, with switching interlock 	IP66
Buzzers**				
Buzzer 24V AC/DC	Зу24	Зу24	Buzzer with 24V DC and AC supply voltage	IP65
Buzzer 230V AC	Зу230	Зу230	Buzzer with 230V AC supply voltage	IP65
Cam switches and changeover switches**				
ПВ2 cam switch	ПВ2	ПВ2	Two-pole cam switch 	IP67
ПВ3 cam switch	ПВ3	ПВ3	Three-pole cam switch 	IP67
ПВ4 cam switch	ПВ4	ПВ4	Four-pole cam switch 	IP67
ПП2/Н2 cam changeover switch	ПП2Д	ПП2Д	Two-pole two-position cam changeover switch 	IP67
ПП2/Н3 cam changeover switch	ПП2Т	ПП2Т	Two-pole three-position cam changeover switch 	IP67
ПП3/Н2 cam changeover switch	ПП3Д	ПП3Д	Three-pole two-position cam changeover switch 	IP67
ПП3/Н3 cam changeover switch	ПП3Т	ПП3Т	Three-pole three-position cam changeover switch 	IP67

Notes:
The lamp colour selected in the order table must match the associated device colour.
* These devices have no choice of illumination or colour. Enter 00 in the lamp position of the order code (see order table).
** These devices have no choice of illumination, colour or contacts. Their designation therefore always matches the example. Enter 00 in the lamp position of the order code (see order table).

Supply with acceptance:
- RMRS - RRR

Junction boxes
Metal junction boxes
Plug-in transformers
Push-button stations
Cam switches
Cam changeover switches
Cabin switches and sockets
Junction boxes with protection unit
Power boxes with protection unit
Interference suppression filters
Electromagnetic starters
AC UPS
DC UPS
Media server

Examples of stations.

Station with indicator lamp.

General view and installation dimensions

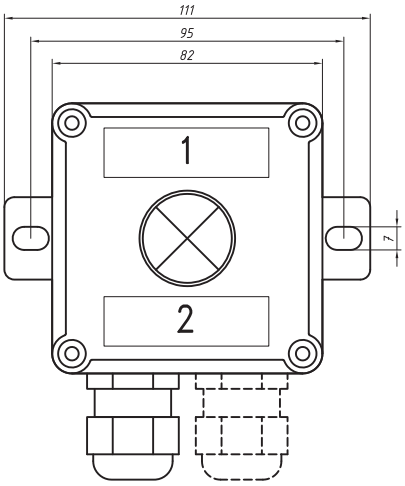

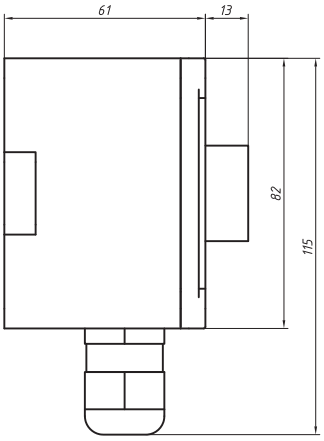

Electrical schematic diagram*

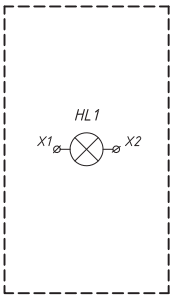

*the diagram shows the configuration ПКП-00-2203ел-1

Text of labels on strips

№	Name	Size
1	Label text 1 (For example "On")	50x15
2	Label text 2 (For example "Sauna")	50x15

Station with push-button.

General view and installation dimensions

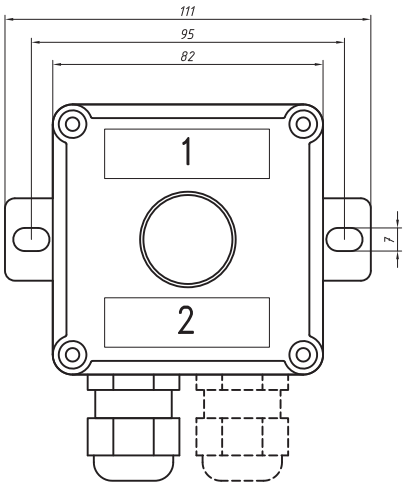

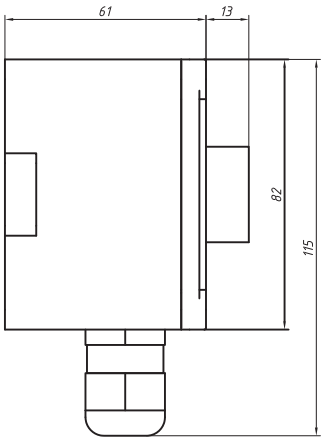

Electrical schematic diagram*

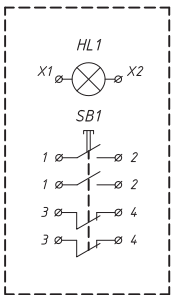

*the diagram shows the configuration ПКП-К223ел-2203ел-1

(with maximum configuration)

Text of labels on strips

№	Name	Size
1	Label text 1 (For example "START")	50x15
2	Label text 2 (For example "Fuel pump")	50x15

Supply with acceptance:
- RMRS - RRR

Examples of stations.

Station with push-button protected against accidental actuation.

General view and installation dimensions

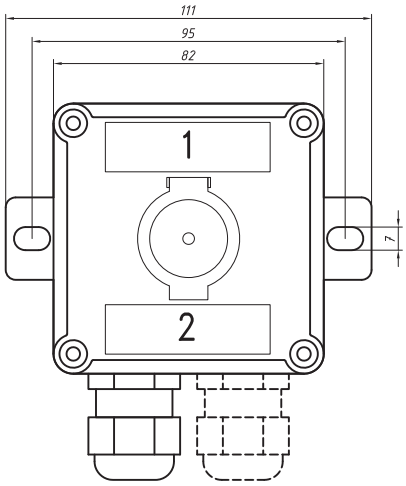

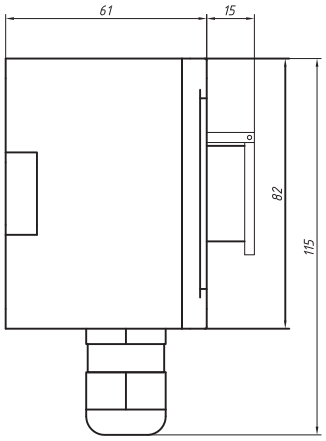

Electrical schematic diagram*

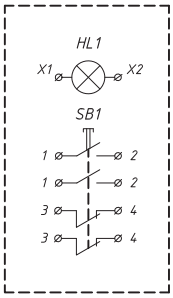

*the diagram shows the configuration ПКП-К3223ел-2203ел-1

(with maximum configuration)

Text of labels on strips

№	Name	Size
1	Label text 1 (For example "START")	50x15
2	Label text 2 (For example "Fuel pump")	50x15

Station with dual push-button.

General view and installation dimensions

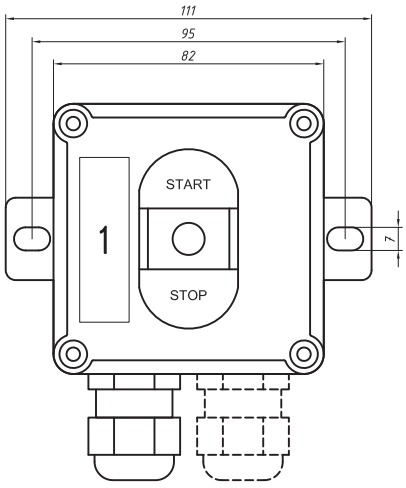

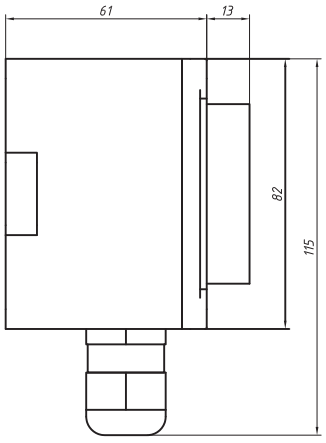

Electrical schematic diagram*

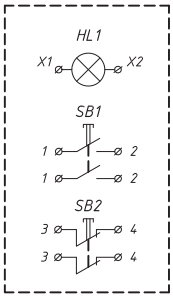

*the diagram shows the configuration ПКП-КД22-2203ел-1

(with maximum configuration)

Text of labels on strips

№	Name	Size
1	Label text 1 (For example "Fuel pump")	50x15

Supply with acceptance:
- RMRS - RRR

Examples of stations.

Station with emergency stop push-button.

General view and installation dimensions

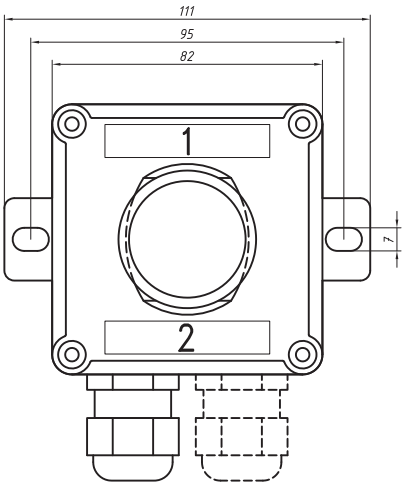

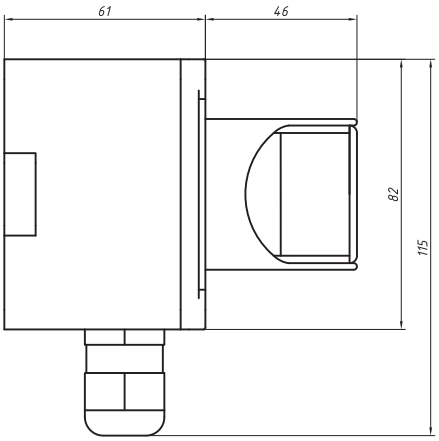

Electrical schematic diagram*

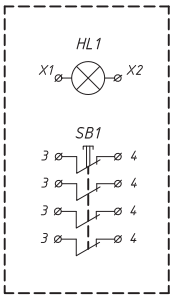

*the diagram shows the configuration ПКП-КА04-24Кр-1

(with maximum configuration)

Text of labels on strips

№	Name	Size
1	Label text 1 (For example "STOP")	50x10
2	Label text 2 (For example "Fuel pump")	50x10

Station with switch.

General view and installation dimensions

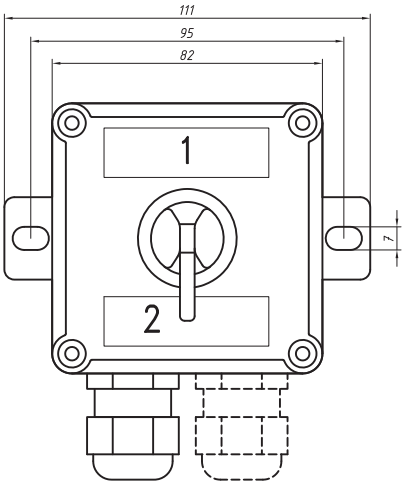

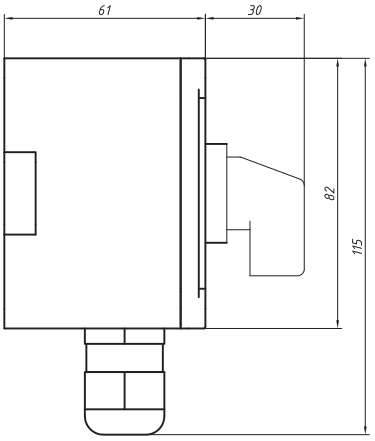

Electrical schematic diagram*

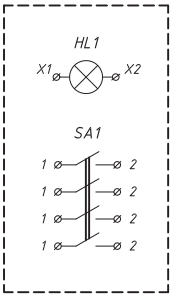

Contact closure chart

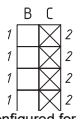

Configured for the specific case

*the diagram shows the configuration ПКП-ПДФ40Желт-220Желт-1

(with maximum configuration)

Text of labels on strips

№	Name	Size
1	Label text 1 (For example "1-Off, 2-On")	50x15
2	Label text 2 (For example "Ventilation")	50x15

Supply with acceptance:
- RMRS - RRR

Examples of stations.

Station with key-operated switch.

General view and installation dimensions

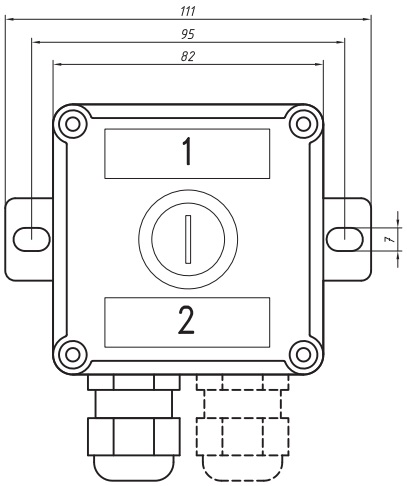

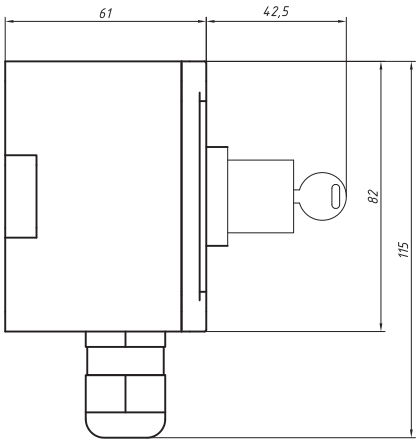

Electrical schematic diagram*

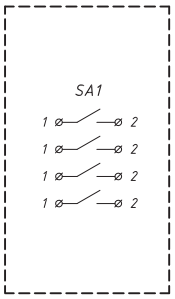

Contact closure chart

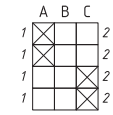

Configured for the specific case

*the diagram shows the configuration ПКП-ПКТФ40-00-1

(with maximum configuration)

Text of labels on strips

№	Name	Size
1	Label text 1 (For example "1-Haul in, 2-Off, 3-Pay out")	50x15
2	Label text 2 (For example "Aft winch")	50x15

Station with toggle switch.

General view and installation dimensions

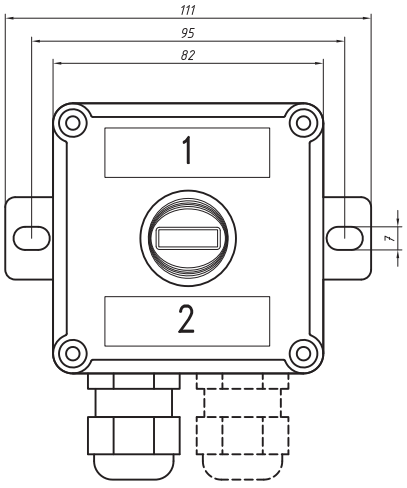

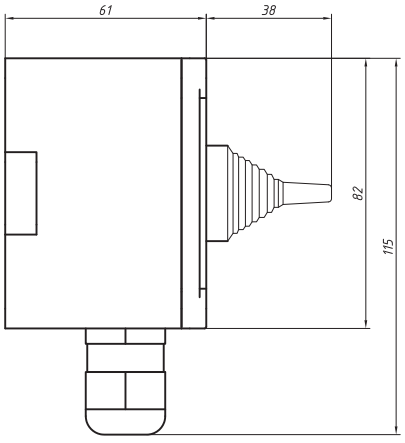

Electrical schematic diagram*

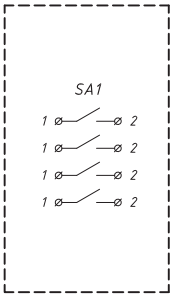

Contact closure chart

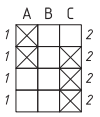

Configured for the specific case

*the diagram shows the configuration ПКП-ТТФ40-00-1

(with maximum configuration)

Text of labels on strips

№	Name	Size
1	Label text 1 (For example "Haul in")	50x15
2	Label text 2 (For example "Pay out")	50x15

Supply with acceptance:
- RMRS - RRR

Examples of stations.

Station with joystick.

General view and installation dimensions

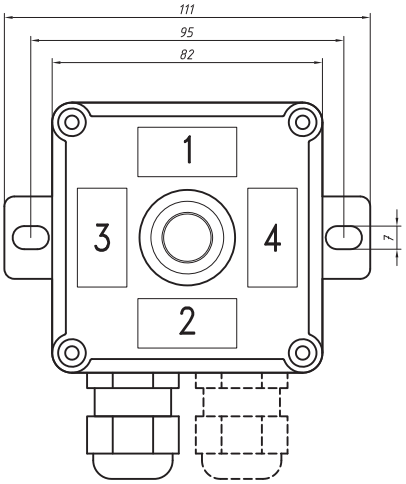

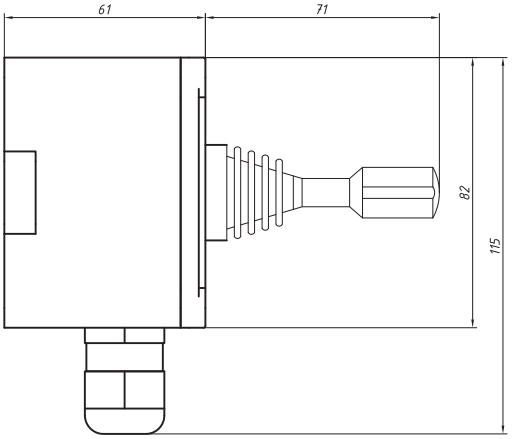

Electrical schematic diagram*

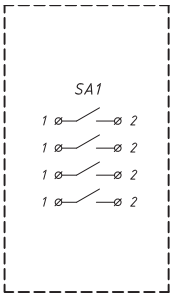

*the diagram shows the configuration ПКП-ДЧ40-00-1

(with maximum configuration)

Contact closure chart

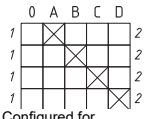

Configured for the specific case

Text of labels on strips

№	Name	Size
1	Label text 1 (For example "Aft winch — haul in")	30x15
2	Label text 2 (For example "Aft winch — pay out")	30x15
3	Label text 3 (For example "Bow winch — haul in")	30x15
4	Label text 4 (For example "Bow winch — pay out")	30x15

Station with buzzer.

General view and installation dimensions

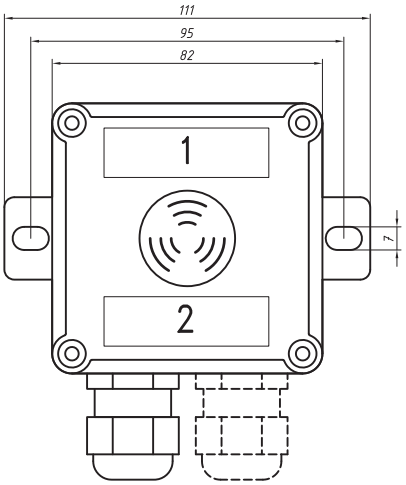

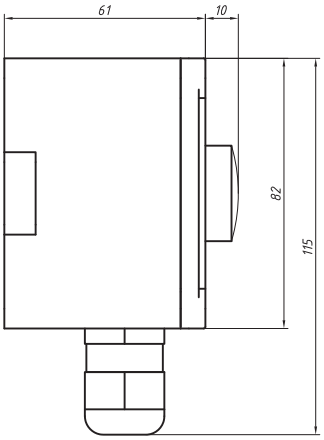

Electrical schematic diagram*

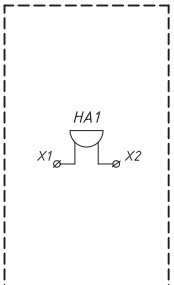

*the diagram shows the configuration ПКП-3у230-00-1

Text of labels on strips

№	Name	Size
1	Label text 1 (For example "Emergency signalling")	50x15
2	Label text 2 (For example "Fuel pump")	50x15

Supply with acceptance:
- RMRS - RRR

Examples of stations.

Station with cam switch/changeover switch.

General view and installation dimensions

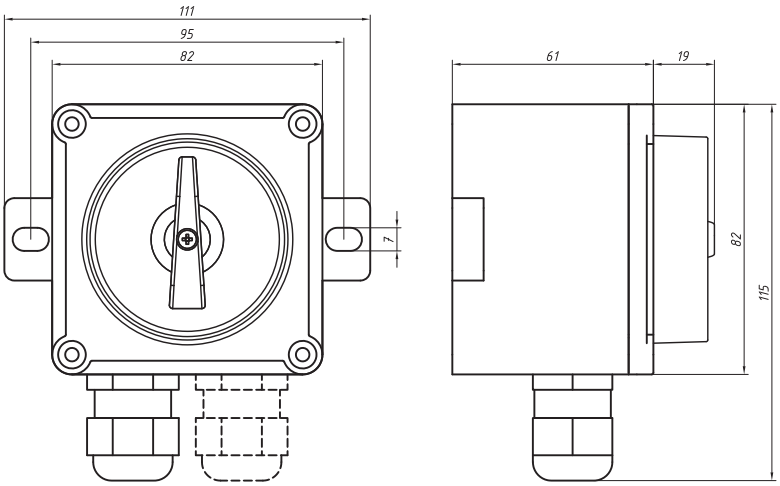

Electrical schematic diagram*

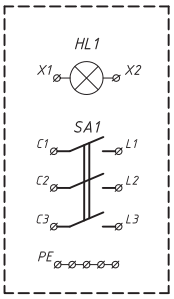

*the diagram shows the configuration ПКП-ПВ3-00-1

Supply with acceptance:
- RMRS - RRR

Junction boxes
Metal junction boxes
Plug-in transformers
Push-button stations
Cam switches
Cam changeover switches
Cabin switches and sockets
Junction boxes with protection unit
Power boxes with protection unit
Interference suppression filters
Electromagnetic starters
AC UPS
DC UPS
Media server

Push-button stations, custom control stations

Description:

Plastic push-button stations are made of glass-fiber-reinforced thermoplastic, resistant to solar radiation and not supporting combustion.

Metal push-button stations are made of steel and stainless steel. Climatic version OM, installation category 1, for installation on open decks (including vessels with unrestricted navigation area), as well as in internal damp and dry spaces.







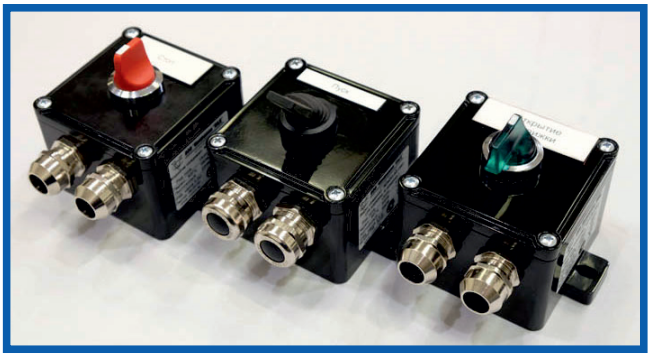





Supply with acceptance:
- RMRS - RRR

Junction boxes
Metal junction boxes
Plug-in transformers
Push-button stations
Cam switches
Cam changeover switches
Cabin switches and sockets
Junction boxes with protection unit
Power boxes with protection unit
Interference suppression filters
Electromagnetic starters
AC UPS
DC UPS
Media server

Junction boxes
Metal junction boxes
Plug-in transformers
Push-button stations
Cam switches
Cam changeover switches
Cabin switches and sockets
Junction boxes with protection unit
Power boxes with protection unit
Interference suppression filters
Electromagnetic starters
AC UPS
DC UPS
Media server

СПВ-type cam switches

Cam switch СПВ2-16-1-67-ОМ1

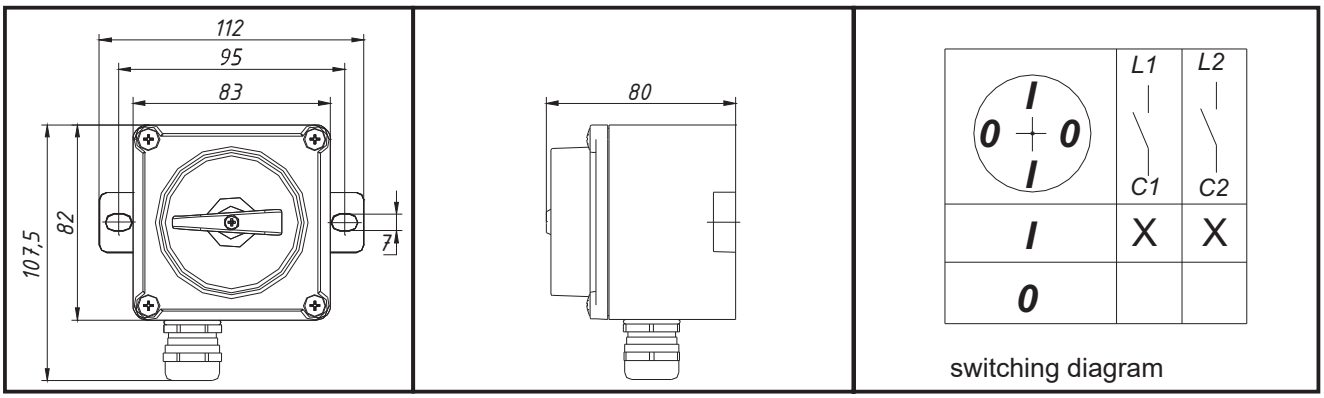

Description: СПВ-type cam switch made of impact-resistant, glass-fibre-reinforced, flame-retardant thermoplastic. Intended for use in electrical networks with DC voltage up to 220 V and AC voltage up to 400 V at a frequency of 50 Hz. OM climatic version, installation category 1, IP67 degree of protection, for installation on open decks (including vessels with unrestricted service area), as well as in indoor damp and dry spaces.

	СПВ2-16-1-67-ОМ1
Technical documentation (RMRS, RRR acceptance)	TU VC-012-2015
Technical documentation (VP acceptance)	TU VC-012-2015B
Degree of protection	IP67
Flammability category	UL94 V0
Auto-ignition temperature	960°C
Enclosure material	thermoplastic
Cable gland material	brass
Number of cable glands	1
Cable diameter, mm	8-16
Terminal block	2 poles, 1 terminal, 2.5 mm².
	Connect no more than two conductors with a cross-section of 2.5 mm² to the terminal.
Terminal lug type	Ring
Voltage, V:	
- alternating current	400
- direct current	220
Rated current, A	10 at 400V
	16 at a voltage not exceeding 220V
Mass, kg	0,278

Manufacture with an external M4 grounding screw is possible.
Manufacture with a cable entry of a different diameter is possible (6-12, 10-14, 8-16, 13-18 mm).
To be specified when ordering: СПВ2-16-1-67-ОМ1 with external grounding screw, diameter cable entry 6-12 mm.

Supply with acceptance:
- RMRS
- RRR
- VP

Cam switch СПВ2-16-2-67-ОМ1

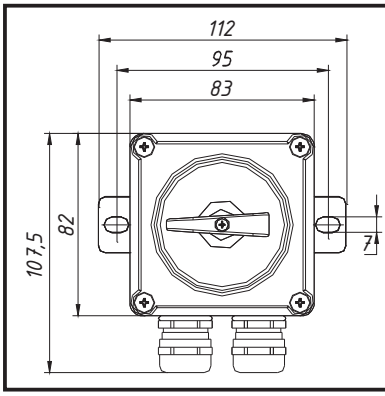

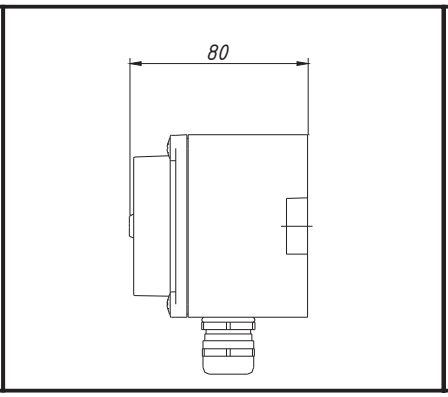

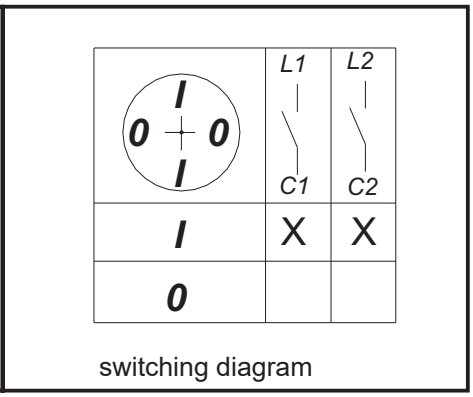

switching diagram

Description: СПВ-type cam switch made of impact-resistant, glass-fibre-reinforced, flame-retardant thermoplastic. Intended for use in electrical networks with DC voltage up to 220 V and AC voltage up to 400 V at a frequency of 50 Hz. OM climatic version, installation category 1, IP67 degree of protection, for installation on open decks (including vessels with unrestricted service area), as well as in indoor damp and dry spaces.

	СПВ2-16-2-67-ОМ1
Technical documentation (RMRS, RRR acceptance)	TU VC-012-2015
Technical documentation (VP acceptance)	TU VC-012-2015B
Degree of protection	IP67
Flammability category	UL94 V0
Auto-ignition temperature	960°C
Enclosure material	thermoplastic
Cable gland material	brass
Number of cable glands	2
Cable diameter, mm	8-16
Terminal block	2 poles, 1 terminal, 2.5 mm².
	Connect no more than two conductors with a cross-section of 2.5 mm² to the terminal.
Terminal lug type	Ring
Voltage, V:	
- alternating current	400
- direct current	220
Rated current, A	10 at 400V
	16 at a voltage not exceeding 220V
Mass, kg	0,292

Manufacture with an external M4 grounding screw is possible.
Manufacture with a cable entry of a different diameter is possible (6-12, 10-14, 8-16, 13-18 mm).
To be specified when ordering: СПВ2-16-2-67-ОМ1 with external grounding screw, diameter cable entry 6-12 mm.

Supply with acceptance:
- RMRS
- RRR
- VP

Cam switch СПВ2-16-3-67-ОМ1

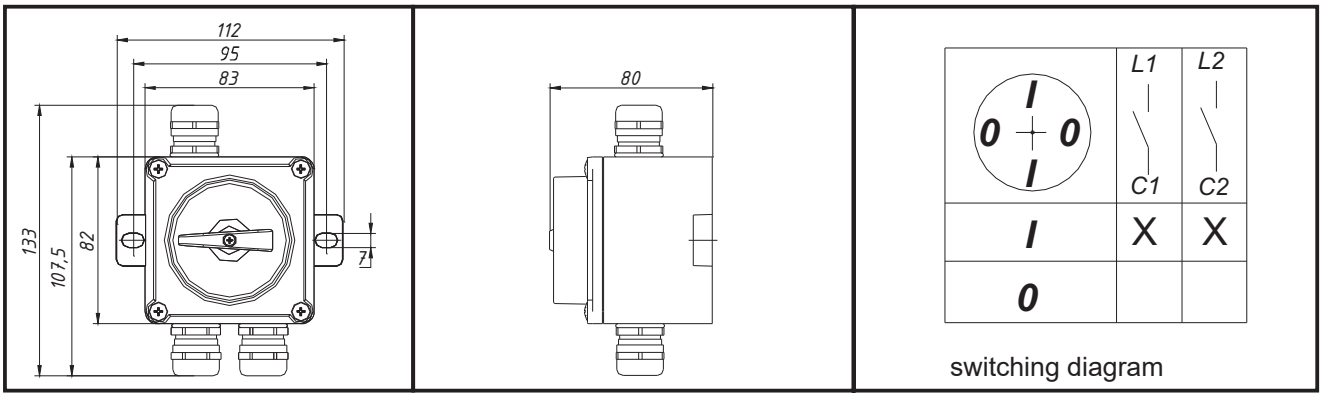

Description: СПВ-type cam switch made of impact-resistant, glass-fibre-reinforced, flame-retardant thermoplastic. Intended for use in electrical networks with DC voltage up to 220 V and AC voltage up to 400 V at a frequency of 50 Hz. OM climatic version, installation category 1, IP67 degree of protection, for installation on open decks (including vessels with unrestricted service area), as well as in indoor damp and dry spaces.

	СПВ2-16-3-67-ОМ1
Technical documentation (RMRS, RRR acceptance)	TU VC-012-2015
Technical documentation (VP acceptance)	TU VC-012-2015B
Degree of protection	IP67
Flammability category	UL94 V0
Auto-ignition temperature	960°C
Enclosure material	thermoplastic
Cable gland material	brass
Number of cable glands	3
Cable diameter, mm	8-16
Terminal block	2 poles, 1 terminal, 2.5 mm².
	Connect no more than two conductors with a cross-section of 2.5 mm² to the terminal.
Terminal lug type	Ring
Voltage, V:	
- alternating current	400
- direct current	220
Rated current, A	10 at 400V
	16 at a voltage not exceeding 220V
Mass, kg	0,306

Manufacture with an external M4 grounding screw is possible.
Manufacture with a cable entry of a different diameter is possible (6-12, 10-14, 8-16, 13-18 mm).
To be specified when ordering: СПВ2-16-3-67-ОМ1 with external grounding screw, diameter cable entry 6-12 mm.

Supply with acceptance:
- RMRS
- RRR
- VP

Cam switch СПВ2-16-4-67-ОМ1

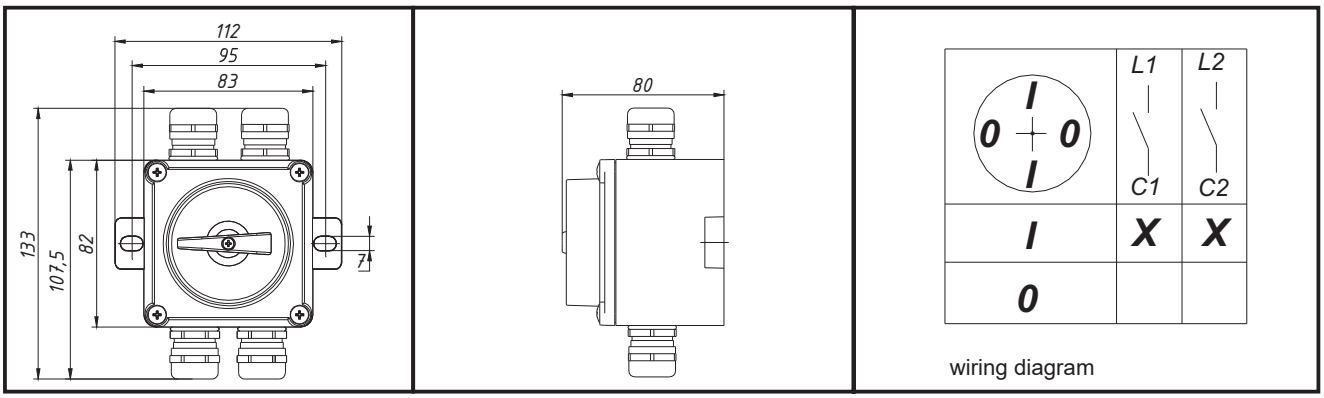

Description: СПВ-type cam switch made of impact-resistant, glass-fibre-reinforced thermoplastic that does not support combustion. Designed for use in DC electrical networks up to 220 V and AC electrical networks at 50 Hz up to 400 V. Climate version OM, installation category 1, degree of protection IP67, for installation on open decks (including vessels operating without navigation area restrictions), as well as in internal damp and dry spaces.

	СПВ2-16-4-67-ОМ1
Technical documentation (RMRS, RRR acceptance)	TU VC-012-2015
Technical documentation (VP acceptance)	TU VC-012-2015B
Degree of protection	IP67
Flammability category	UL94 V0
Auto-ignition temperature	960°C
Enclosure material	thermoplastic
Cable gland material	brass
Number of cable glands	4
Cable diameter, mm	8-16
Terminal block	2 poles, 1 terminal, 2.5 mm². Connect no more than two 2.5 mm² conductors to the terminal.
Terminal lug type	Ring
Voltage, V:	
- alternating current	400
- direct current	220
Rated current, A	10 at 400 V 16 at a voltage not exceeding 220 V
Mass, kg	0,320

Manufacture with an external M4 grounding screw is possible.

Manufacture with a cable entry of a different diameter is possible (6-12, 10-14, 8-16, 13-18 mm).

Specify when ordering: СПВ2-16-4-67-ОМ1 with an external earthing screw, cable entry diameter 6–12 mm.

Supply with acceptance:
- RMRS - RRR - VP

Cam switch СПВ3-16-2-67-ОМ1

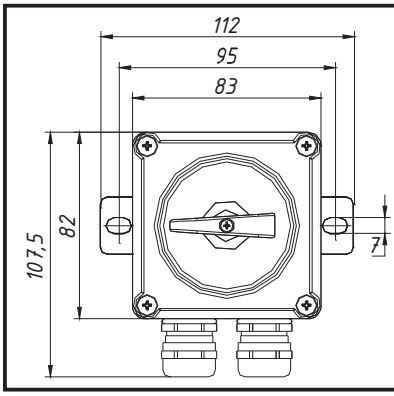

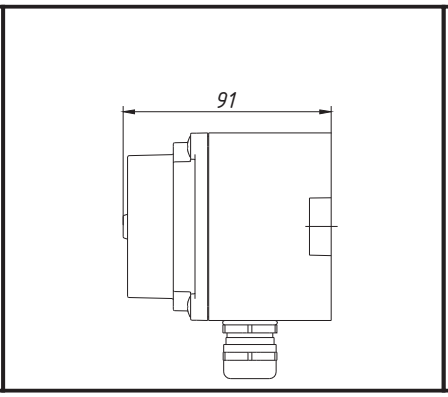

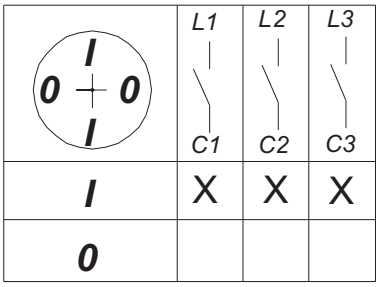

switching diagram

Description: СПВ-type cam switch made of impact-resistant, glass-fibre-reinforced, flame-retardant thermoplastic. Intended for use in electrical networks with DC voltage up to 220 V and AC voltage up to 400 V at a frequency of 50 Hz. OM climatic version, installation category 1, IP67 degree of protection, for installation on open decks (including vessels with unrestricted service area), as well as in indoor damp and dry spaces.

	СПВ3-16-2-67-ОМ1
Technical documentation (RMRS, RRR acceptance)	TU VC-012-2015
Technical documentation (VP acceptance)	TU VC-012-2015B
Degree of protection	IP67
Flammability category	UL94 V0
Auto-ignition temperature	960°C
Enclosure material	thermoplastic
Cable gland material	brass
Number of cable glands	2
Cable diameter, mm	8-16
Terminal block	3 poles, 1 terminal, 2.5 mm².
	Connect no more than two conductors with a cross-section of 2.5 mm² to the terminal.
Terminal lug type	Ring
Voltage, V:	
- alternating current	400
- direct current	220
Rated current, A	10 at 400V
	16 at a voltage not exceeding 220V
Mass, kg	0,306

Manufacture with an external M4 grounding screw is possible.
Manufacture with a cable entry of a different diameter is possible (6-12, 10-14, 8-16, 13-18 mm).
To be specified when ordering: СПВ3-16-2-67-ОМ1 with external grounding screw, diameter cable entry 6-12 mm.

Supply with acceptance:
- RMRS
- RRR
- VP

Cam switch СПВ3-16-3-67-ОМ1

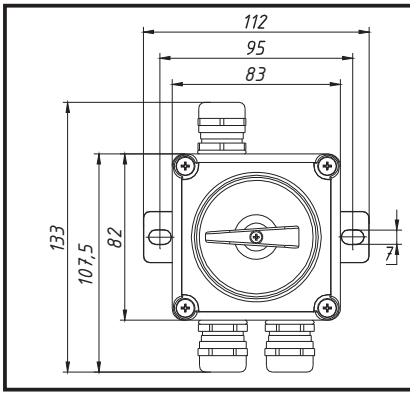

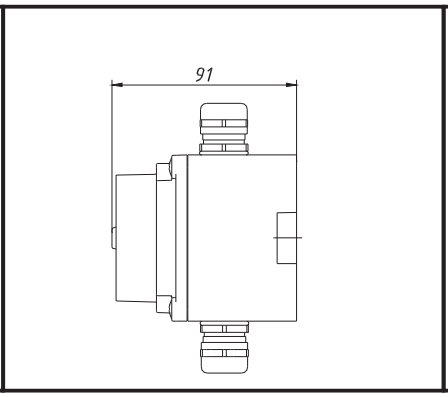

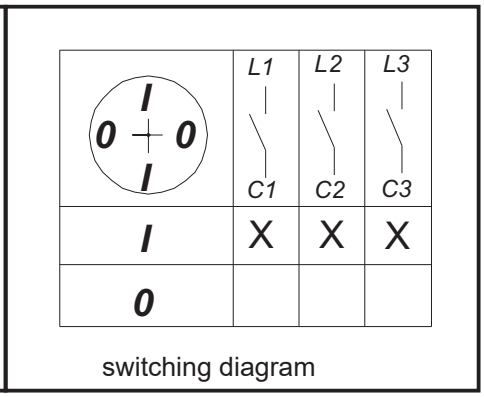

switching diagram

Description: СПВ-type cam switch made of impact-resistant, glass-fibre-reinforced, flame-retardant thermoplastic. Intended for use in electrical networks with DC voltage up to 220 V and AC voltage up to 400 V at a frequency of 50 Hz. OM climatic version, installation category 1, IP67 degree of protection, for installation on open decks (including vessels with unrestricted service area), as well as in indoor damp and dry spaces.

	СПВ3-16-3-67-ОМ1
Technical documentation (RMRS, RRR acceptance)	TU VC-012-2015
Technical documentation (VP acceptance)	TU VC-012-2015B
Degree of protection	IP67
Flammability category	UL94 V0
Auto-ignition temperature	960°C
Enclosure material	thermoplastic
Cable gland material	brass
Number of cable glands	3
Cable diameter, mm	8-16
Terminal block	3 poles, 1 terminal, 2.5 mm².
	Connect no more than two conductors with a cross-section of 2.5 mm² to the terminal.
Terminal lug type	Ring
Voltage, V:	
- alternating current	400
- direct current	220
Rated current, A	10 at 400V
	16 at a voltage not exceeding 220V
Mass, kg	0,320

Manufacture with an external M4 grounding screw is possible.
Manufacture with a cable entry of a different diameter is possible (6-12, 10-14, 8-16, 13-18 mm).
To be specified when ordering: СПВ3-16-3-67-ОМ1 with external grounding screw, diameter cable entry 6-12 mm.

Supply with acceptance:
- RMRS
- RRR
- VP

Cam switch СПВ4-16-2-67-ОМ1

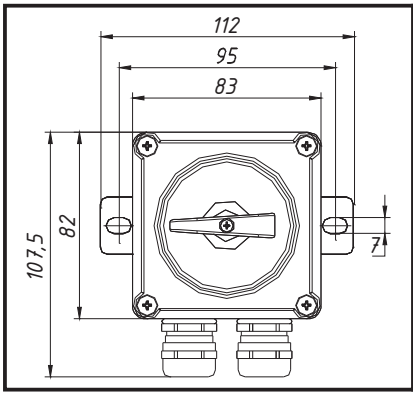

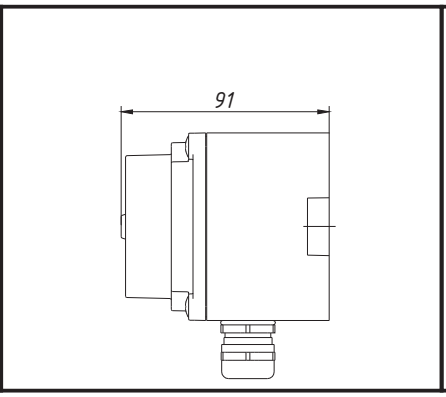

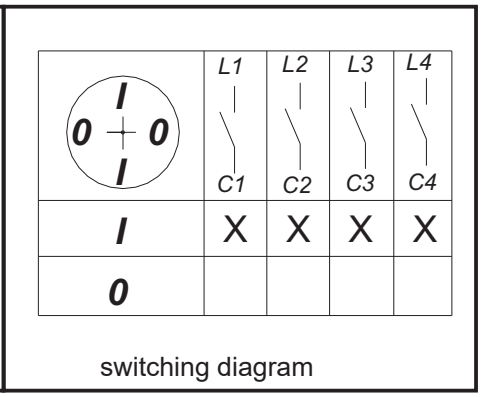

switching diagram

Description: СПВ-type cam switch made of impact-resistant, glass-fibre-reinforced, flame-retardant thermoplastic. Intended for use in electrical networks with DC voltage up to 220 V and AC voltage up to 400 V at a frequency of 50 Hz. OM climatic version, installation category 1, IP67 degree of protection, for installation on open decks (including vessels with unrestricted service area), as well as in indoor damp and dry spaces.

	СПВ4-16-2-67-ОМ1
Technical documentation (RMRS, RRR acceptance)	TU VC-012-2015
Technical documentation (VP acceptance)	TU VC-012-2015B
Degree of protection	IP67
Flammability category	UL94 V0
Auto-ignition temperature	960°C
Enclosure material	thermoplastic
Cable gland material	brass
Number of cable glands	2
Cable diameter, mm	8-16
Terminal block	4 poles, 1 terminal, 2.5 mm².
	Connect no more than two conductors with a cross-section of 2.5 mm² to the terminal.
Terminal lug type	Ring
Voltage, V:	
- alternating current	400
- direct current	220
Rated current, A	10 at 400V
	16 at a voltage not exceeding 220V
Mass, kg	0,346

Manufacture with an external M4 grounding screw is possible.
Manufacture with a cable entry of a different diameter is possible (6-12, 10-14, 8-16, 13-18 mm).
To be specified when ordering: СПВ4-16-2-67-ОМ1 with external grounding screw, diameter cable entry 6-12 mm.

Supply with acceptance:
- RMRS
- RRR
- VP

Cam switch СПВ4-16-3-67-ОМ1

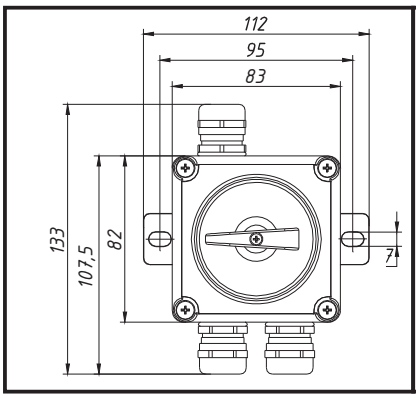

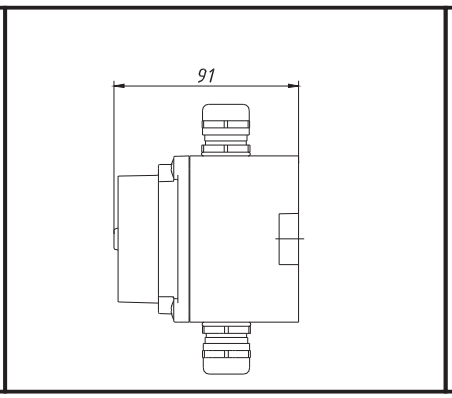

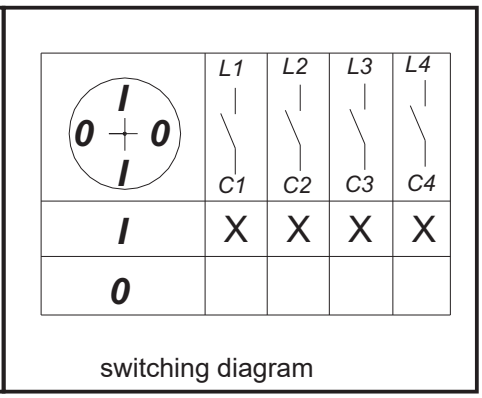

switching diagram

Description: СПВ-type cam switch made of impact-resistant, glass-fibre-reinforced, flame-retardant thermoplastic. Intended for use in electrical networks with DC voltage up to 220 V and AC voltage up to 400 V at a frequency of 50 Hz. OM climatic version, installation category 1, IP67 degree of protection, for installation on open decks (including vessels with unrestricted service area), as well as in indoor damp and dry spaces.

	СПВ4-16-3-67-ОМ1
Technical documentation (RMRS, RRR acceptance)	TU VC-012-2015
Technical documentation (VP acceptance)	TU VC-012-2015B
Degree of protection	IP67
Flammability category	UL94 V0
Auto-ignition temperature	960°C
Enclosure material	thermoplastic
Cable gland material	brass
Number of cable glands	3
Cable diameter, mm	8-16
Terminal block	4 poles, 1 terminal, 2.5 mm².
	Connect no more than two conductors with a cross-section of 2.5 mm² to the terminal.
Terminal lug type	Ring
Voltage, V:	
- alternating current	400
- direct current	220
Rated current, A	10 at 400V
	16 at a voltage not exceeding 220V
Mass, kg	0,360

Manufacture with an external M4 grounding screw is possible.
Manufacture with a cable entry of a different diameter is possible (6-12, 10-14, 8-16, 13-18 mm).
To be specified when ordering: СПВ4-16-3-67-ОМ1 with external grounding screw, diameter cable entry 6-12 mm.

Supply with acceptance:
- RMRS
- RRR
- VP

Junction boxes
Metal junction boxes
Plug-in transformers
Push-button stations
Cam switches
Cam changeover switches
Cabin switches and sockets
Junction boxes with protection unit
Power boxes with protection unit
Interference suppression filters
Electromagnetic starters
AC UPS
DC UPS
Media server

СПП-type cam changeover switches

Cam selector switch СПП2-16/Н2-3-67-ОМ1

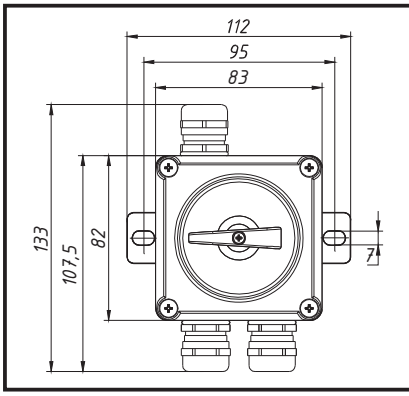

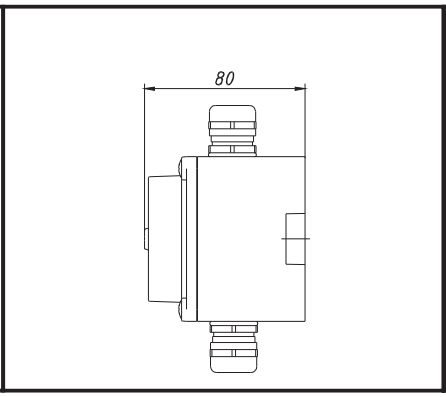

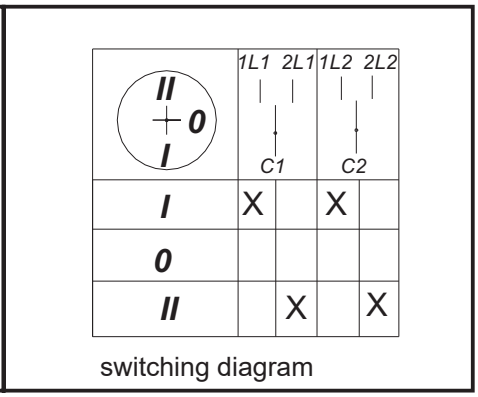

switching diagram

Description: СПП-type cam switch made of impact-resistant, glass-fibre-reinforced, flame-retardant thermoplastic. Intended for use in electrical networks with DC voltage up to 220 V and AC voltage up to 400 V at a frequency of 50 Hz. OM climatic version, installation category 1, IP67 degree of protection, for installation on open decks (including vessels with unrestricted service area), as well as in indoor damp and dry spaces.

	СПП2-16/Н2-3-67-ОМ1
Technical documentation (RMRS, RRR acceptance)	TU VC-012-2015
Technical documentation (VP acceptance)	TU VC-012-2015B
Degree of protection	IP67
Flammability category	UL94 V0
Auto-ignition temperature	960°C
Enclosure material	thermoplastic
Cable gland material	brass
Number of cable glands	3
Cable diameter, mm	8-16
Terminal block	2 poles, 1 terminal, 2.5 mm².
	Connect no more than two conductors with a cross-section of 2.5 mm² to the terminal.
Terminal lug type	Ring
Voltage, V:	
- alternating current	400
- direct current	220
Rated current, A	10 at 400V
	16 at a voltage not exceeding 220V
Mass, kg	0,314

Manufacture with an external M4 grounding screw is possible.
Manufacture with a cable entry of a different diameter is possible (6-12, 10-14, 8-16, 13-18 mm).
To be specified when ordering: СПП2-16/Н2-3-67-ОМ1 with external grounding screw, diameter cable entry 6-12 mm.

Supply with acceptance:
- RMRS
- RRR
- VP

Cam selector switch СПП2-16/Н3-4-67-ОМ1

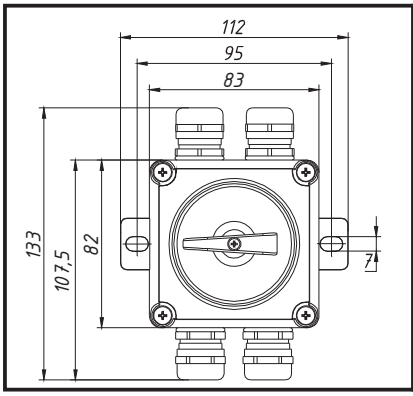

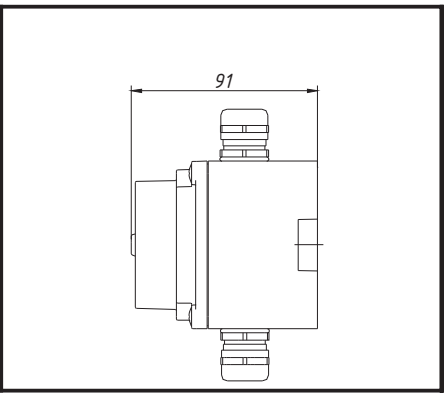

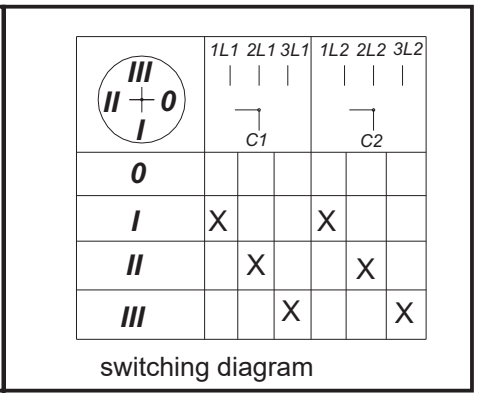

switching diagram

Description: СПП-type cam switch made of impact-resistant, glass-fibre-reinforced, flame-retardant thermoplastic. Intended for use in electrical networks with DC voltage up to 220 V and AC voltage up to 400 V at a frequency of 50 Hz. OM climatic version, installation category 1, IP67 degree of protection, for installation on open decks (including vessels with unrestricted service area), as well as in indoor damp and dry spaces.

	СПП2-16/Н3-4-67-ОМ1
Technical documentation (RMRS, RRR acceptance)	TU VC-012-2015
Technical documentation (VP acceptance)	TU VC-012-2015B
Degree of protection	IP67
Flammability category	UL94 V0
Auto-ignition temperature	960°C
Enclosure material	thermoplastic
Cable gland material	brass
Number of cable glands	4
Cable diameter, mm	8-16
Terminal block	2 poles, 1 terminal, 2.5 mm².
	Connect no more than two conductors with a cross-section of 2.5 mm² to the terminal.
Terminal lug type	Ring
Voltage, V:	
- alternating current	400
- direct current	220
Rated current, A	10 at 400V
	16 at a voltage not exceeding 220V
Mass, kg	0,362

Manufacture with an external M4 grounding screw is possible.
Manufacture with a cable entry of a different diameter is possible (6-12, 10-14, 8-16, 13-18 mm).
To be specified when ordering: СПП2-16/Н3-4-67-ОМ1 with external grounding screw, diameter cable entry 6-12 mm.

Supply with acceptance:
- RMRS
- RRR
- VP

Cam selector switch СПП3-16/Н2-3-67-ОМ1

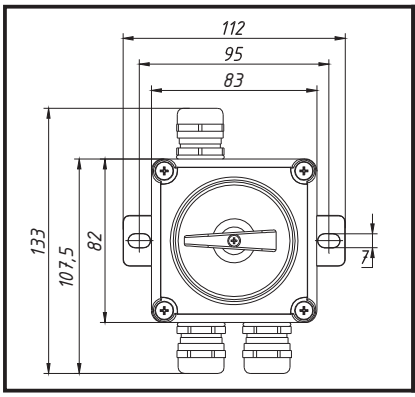

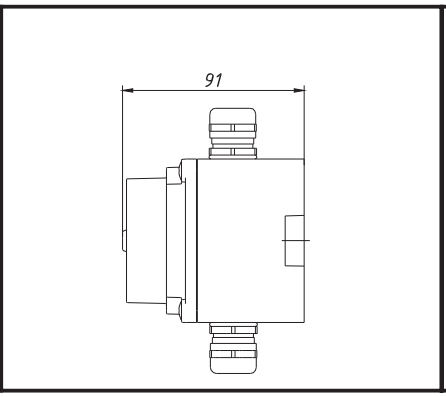

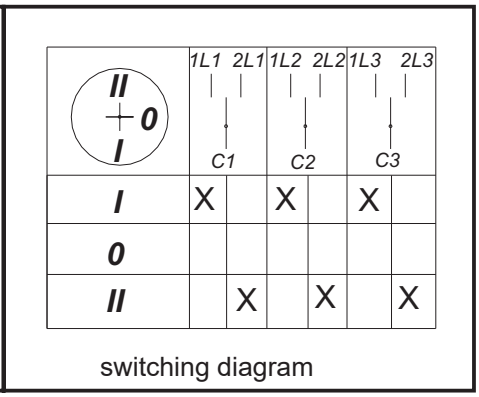

switching diagram

Description: СПП-type cam switch made of impact-resistant, glass-fibre-reinforced, flame-retardant thermoplastic. Intended for use in electrical networks with DC voltage up to 220 V and AC voltage up to 400 V at a frequency of 50 Hz. OM climatic version, installation category 1, IP67 degree of protection, for installation on open decks (including vessels with unrestricted service area), as well as in indoor damp and dry spaces.

	СПП3-16/Н2-3-67-ОМ1
Technical documentation (RMRS, RRR acceptance)	TU VC-012-2015
Technical documentation (VP acceptance)	TU VC-012-2015B
Degree of protection	IP67
Flammability category	UL94 V0
Auto-ignition temperature	960°C
Enclosure material	thermoplastic
Cable gland material	brass
Number of cable glands	3
Cable diameter, mm	8-16
Terminal block	3 poles, 1 terminal, 2.5 mm².
	Connect no more than two conductors with a cross-section of 2.5 mm² to the terminal.
Terminal lug type	Ring
Voltage, V:	
- alternating current	400
- direct current	220
Rated current, A	10 at 400V
	16 at a voltage not exceeding 220V
Mass, kg	0,332

Manufacture with an external M4 grounding screw is possible.
Manufacture with a cable entry of a different diameter is possible (6-12, 10-14, 8-16, 13-18 mm).
To be specified when ordering: СПП3-16/Н2-3-67-ОМ1 with external grounding screw, diameter cable entry 6-12 mm.

Supply with acceptance:
- RMRS
- RRR
- VP

Cam selector switch СПП3-16/Н3-4-67-ОМ1

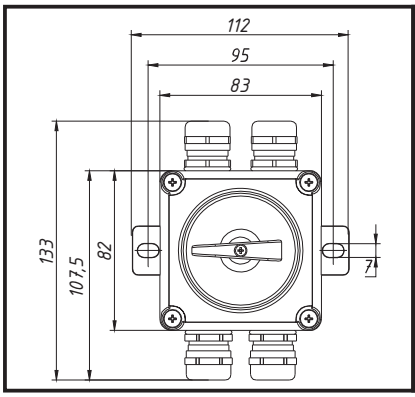

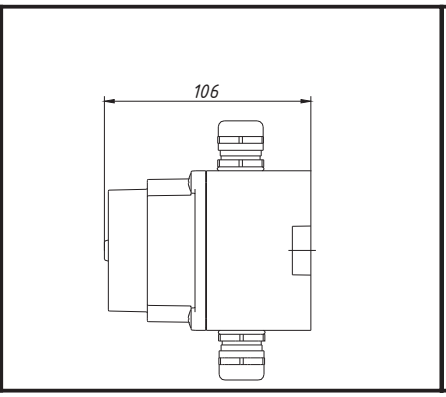

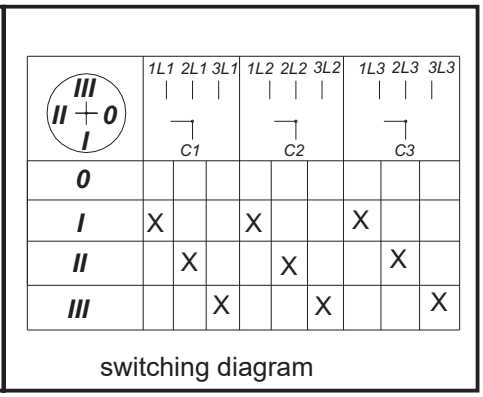

switching diagram

Description: СПП-type cam switch made of impact-resistant, glass-fibre-reinforced, flame-retardant thermoplastic. Intended for use in electrical networks with DC voltage up to 220 V and AC voltage up to 400 V at a frequency of 50 Hz. OM climatic version, installation category 1, IP67 degree of protection, for installation on open decks (including vessels with unrestricted service area), as well as in indoor damp and dry spaces.

	СПП3-16/Н3-4-67-ОМ1
Technical documentation (RMRS, RRR acceptance)	TU VC-012-2015
Technical documentation (VP acceptance)	TU VC-012-2015B
Degree of protection	IP67
Flammability category	UL94 V0
Auto-ignition temperature	960°C
Enclosure material	thermoplastic
Cable gland material	brass
Number of cable glands	4
Cable diameter, mm	8-16
Terminal block	3 poles, 1 terminal, 2.5 mm².
	Connect no more than two conductors with a cross-section of 2.5 mm² to the terminal.
Terminal lug type	Ring
Voltage, V:	
- alternating current	400
- direct current	220
Rated current, A	10 at 400V
	16 at a voltage not exceeding 220V
Mass, kg	0,396

Manufacture with an external M4 grounding screw is possible.
Manufacture with a cable entry of a different diameter is possible (6-12, 10-14, 8-16, 13-18 mm).
To be specified when ordering: СПП3-16/Н3-4-67-ОМ1 with external grounding screw, diameter cable entry 6-12 mm.

Supply with acceptance:
- RMRS
- RRR
- VP

Cam selector switch СПП4-16/Н2-3-67-ОМ1

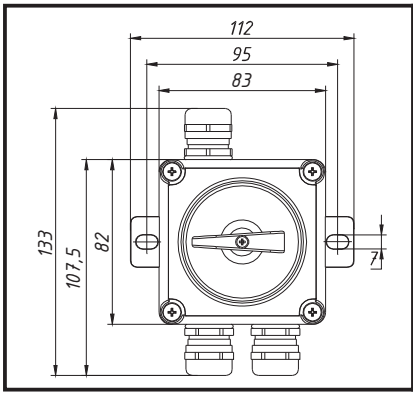

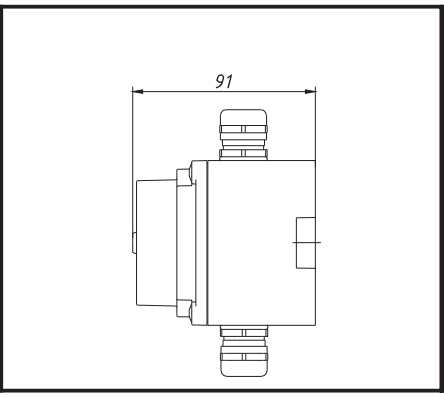

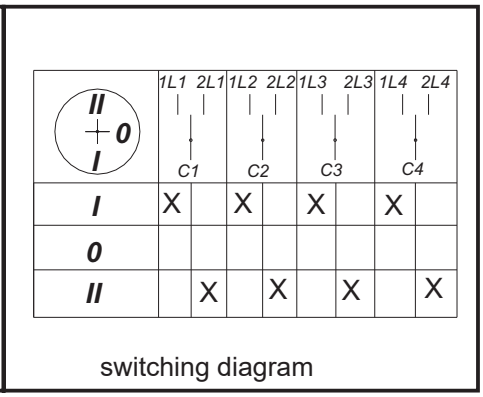

switching diagram

Description: СПП-type cam switch made of impact-resistant, glass-fibre-reinforced, flame-retardant thermoplastic. Intended for use in electrical networks with DC voltage up to 220 V and AC voltage up to 400 V at a frequency of 50 Hz. OM climatic version, installation category 1, IP67 degree of protection, for installation on open decks (including vessels with unrestricted service area), as well as in indoor damp and dry spaces.

	СПП4-16/Н2-3-67-ОМ1
Technical documentation (RMRS, RRR acceptance)	TU VC-012-2015
Technical documentation (VP acceptance)	TU VC-012-2015B
Degree of protection	IP67
Flammability category	UL94 V0
Auto-ignition temperature	960°C
Enclosure material	thermoplastic
Cable gland material	brass
Number of cable glands	3
Cable diameter, mm	8-16
Terminal block	4 poles, 1 terminal, 2.5 mm².
	Connect no more than two conductors with a cross-section of 2.5 mm² to the terminal.
Terminal lug type	Ring
Voltage, V:	
- alternating current	400
- direct current	220
Rated current, A	10 at 400V
	16 at a voltage not exceeding 220V
Mass, kg	0,432

Manufacture with an external M4 grounding screw is possible.
Manufacture with a cable entry of a different diameter is possible (6-12, 10-14, 8-16, 13-18 mm).
To be specified when ordering: СПП4-16/Н2-3-67-ОМ1 with external grounding screw, diameter cable entry 6-12 mm.

Supply with acceptance:
- RMRS
- RRR
- VP

Junction boxes
Metal junction boxes
Plug-in transformers
Push-button stations
Cam switches
Cam changeover switches
Cabin switches and sockets
Junction boxes with protection unit
Power boxes with protection unit
Interference suppression filters
Electromagnetic starters
AC UPS
DC UPS
Media server

Cabin switches and sockets

Built-in single-gang two-pole switch

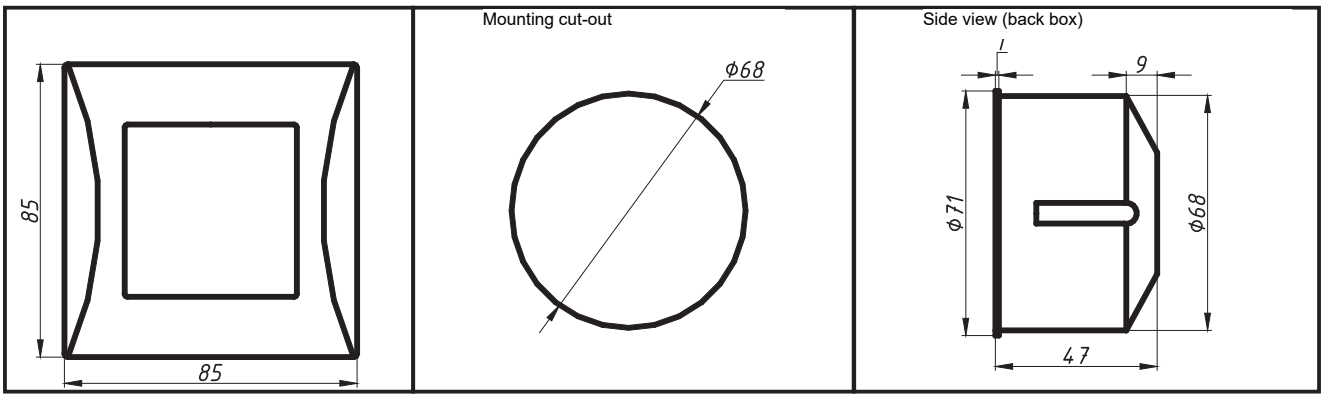

Description: Flush-mounted single-rocker two-pole switch made of impact-resistant halogen-free thermoplastic that does not support combustion. Designed for use in AC electrical networks with a voltage of 230 V and a frequency of 50 Hz. Climate version OM, installation category 4, degree of protection IP20, IP44.

Built-in single-gang two-pole switch	
Technical documentation (RMRS, RRR acceptance)	ИКАМ.23900.360076.018
Degree of protection	IP20, IP44
Flammability category	UL94 V0
Auto-ignition temperature	960°C
Enclosure material	thermoplastic
Cable diameter, mm	10-14
Voltage, V:	
- alternating current	230
Rated current, A	10 at 230 V
A switch with automatic return can be manufactured.	

Supply with acceptance:
- RMRS - RRR

Surface-mounted single-gang two-pole switch

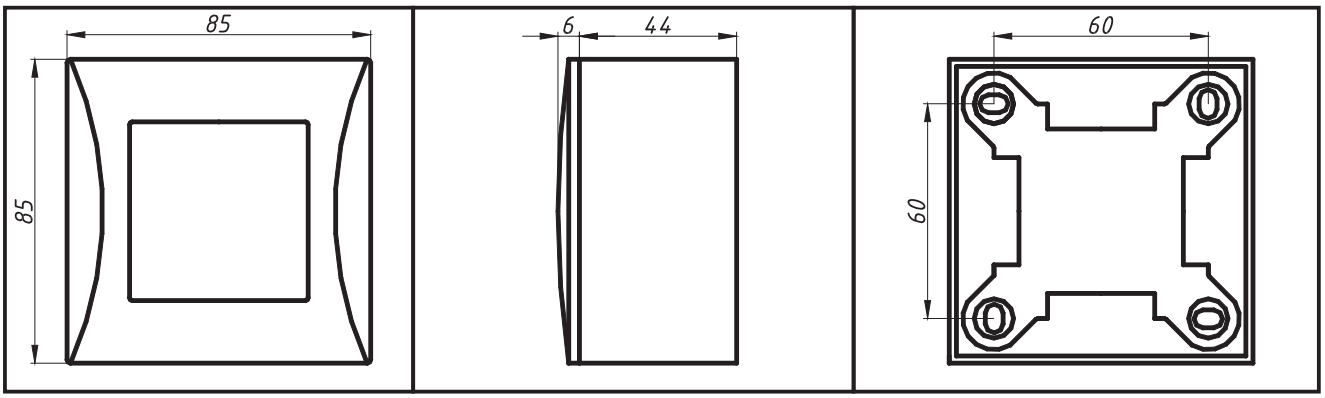

Description: Surface-mounted single-rocker two-pole switch made of impact-resistant halogen-free thermoplastic that does not support combustion. Designed for use in AC electrical networks with a voltage of 230 V and a frequency of 50 Hz. Climate version OM, installation category 4, degree of protection IP20, IP44.

Surface-mounted single-gang two-pole switch		
Technical documentation (RMRS, RRR acceptance)		ИКАМ.23900.360076.018
Degree of protection		IP20, IP44
Flammability category		UL94 V0
Auto-ignition temperature	960°C	
Enclosure material	thermoplastic	
Cable diameter, mm		10-14
Voltage, V:		
- alternating current		230
Rated current, A	10 at 230 V	
A switch with automatic return can be manufactured.		

Supply with acceptance:
- RMRS - RRR

Flush-mounted two-gang two-pole switch

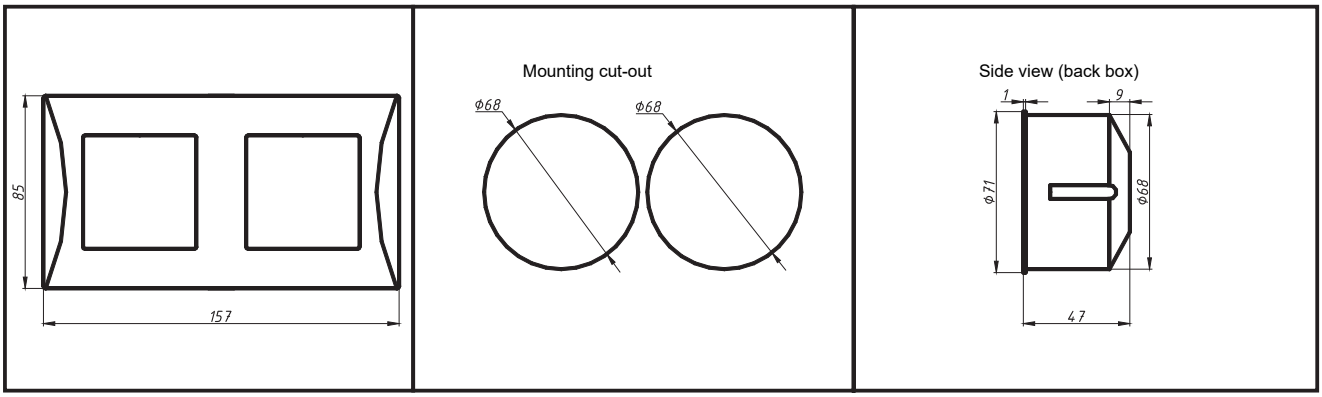

Description:

Flush-mounted single-gang two-pole switch made of impact-resistant halogen-free thermoplastic that does not support combustion.

Designed for use in AC electrical networks with a voltage of 230 V and a frequency of 50 Hz.

Climate version OM, location category 4, degree of protection IP20, IP44.

Built-in two-gang two-pole switch	
Technical documentation (RMRS, RRR acceptance)	ИКАМ.23900.360076.018
Degree of protection	IP20, IP44
Flammability category	UL94 V0
Auto-ignition temperature	960°C
Enclosure material	thermoplastic
Cable diameter, mm	10-14
Voltage, V:	
- alternating current	230
Rated current, A	10 at 230 V
A switch with automatic return can be manufactured.	

Supply with acceptance:
- RMRS - RRR

Single two-pole flush-mounted socket outlet

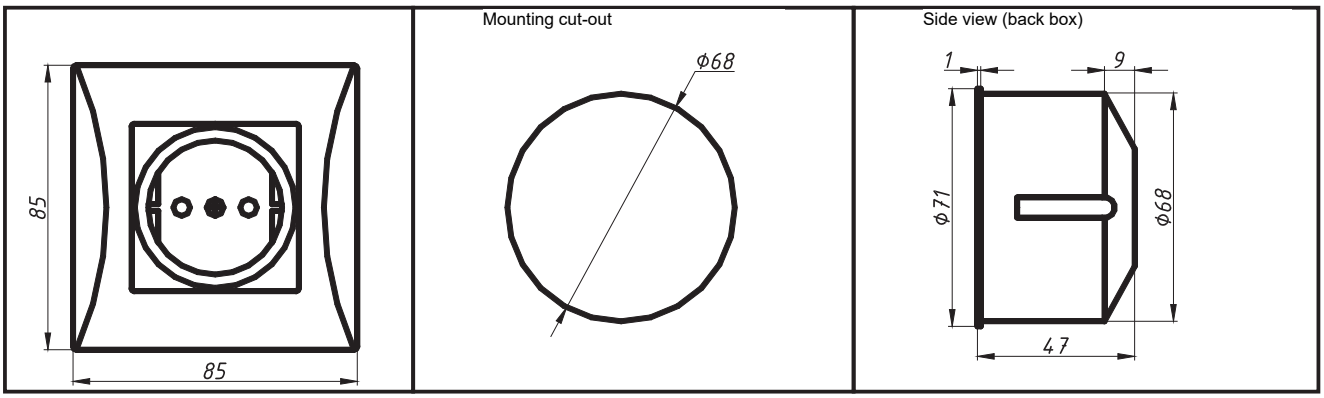

Description: Flush-mounted single two-pole socket made of impact-resistant halogen-free thermoplastic that does not support combustion. Designed for use in AC electrical networks with a voltage of 230 V and a frequency of 50 Hz. Climate version OM, installation category 4, degree of protection IP20, IP44.

Single two-pole flush-mounted socket outlet	
Technical documentation (RMRS, RRR acceptance)	ИКАМ.23900.360076.018
Degree of protection	IP20, IP44
Flammability category	UL94 V0
Auto-ignition temperature	960°C
Enclosure material	thermoplastic
Cable diameter, mm	10-14
Voltage, V:	
- alternating current	230
Rated current, A	16 at 230 V
Earthing	earthing contact provided

Supply with acceptance:
- RMRS - RRR

Double two-pole flush-mounted socket outlet

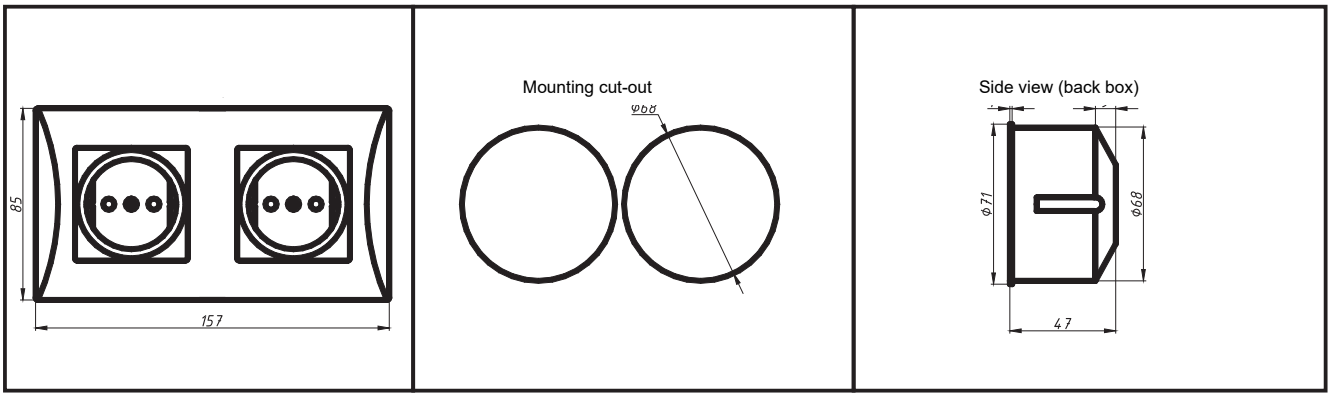

Description: Flush-mounted double two-pole socket made of impact-resistant halogen-free thermoplastic that does not support combustion. Designed for use in AC electrical networks with a voltage of 230 V and a frequency of 50 Hz. Climate version OM, installation category 4, degree of protection IP20, IP44.

Double two-pole flush-mounted socket outlet	
Technical documentation (RMRS, RRR acceptance)	ИКАМ.23900.360076.018
Degree of protection	IP20, IP44
Flammability category	UL94 V0
Auto-ignition temperature	960°C
Enclosure material	thermoplastic
Cable diameter, mm	10-14
Voltage, V:	
- alternating current	230
Rated current, A	16 at 230 V
Earthing	earthing contact provided

Supply with acceptance:
- RMRS - RRR

Single two-pole surface-mounted socket outlet

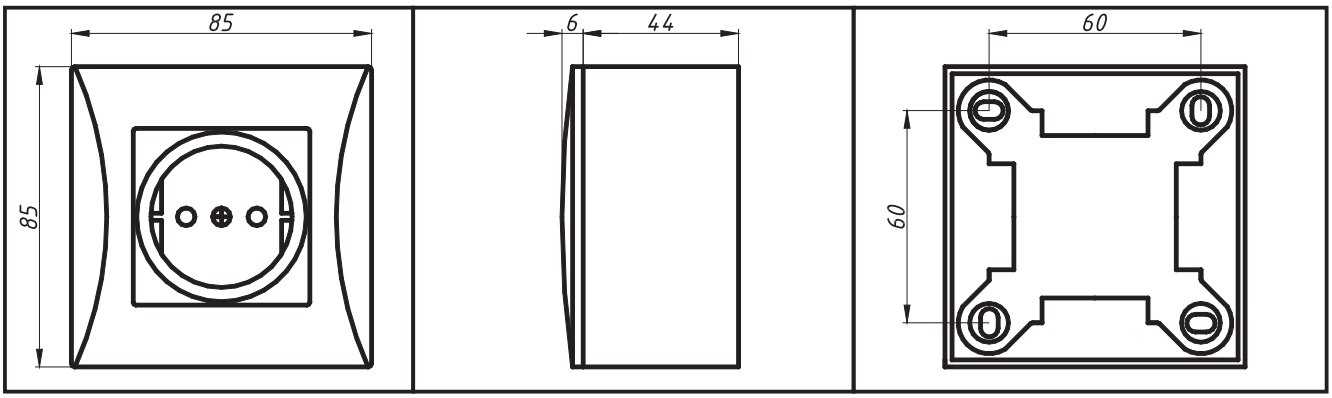

Description: Surface-mounted single two-pole socket made of impact-resistant halogen-free thermoplastic that does not support combustion. Designed for use in AC electrical networks with a voltage of 230 V and a frequency of 50 Hz. Climate version OM, installation category 4, degree of protection IP20, IP44.

Single two-pole surface-mounted socket outlet	
Technical documentation (RMRS, RRR acceptance)	ИКАМ.23900.360076.018
Degree of protection	IP20, IP44
Flammability category	UL94 V0
Auto-ignition temperature	960°C
Enclosure material	thermoplastic
Cable diameter, mm	10-14
Voltage, V:	
- alternating current	230
Rated current, A	16 at 230 V
Earthing	earthing contact provided

Supply with acceptance:
- RMRS - RRR

Double two-pole surface-mounted socket outlet

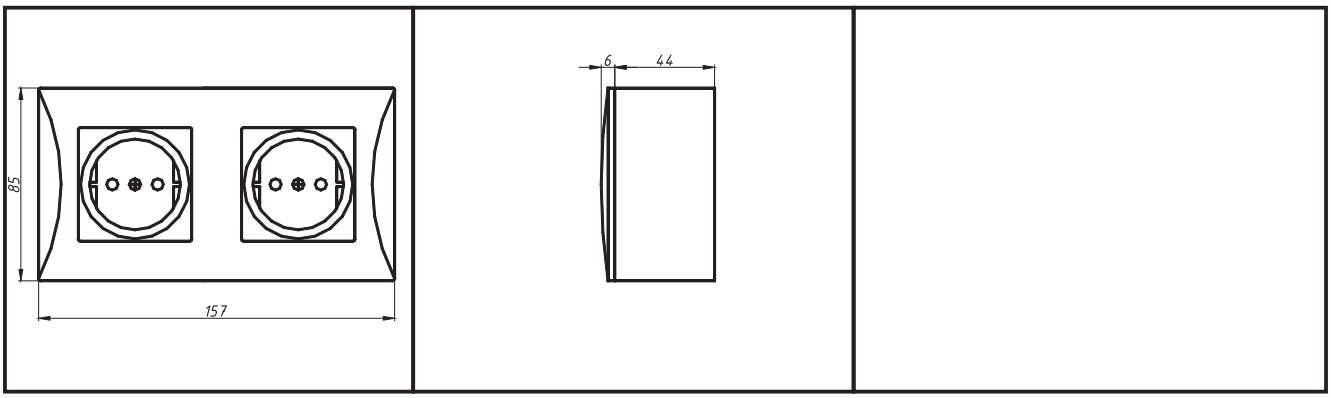

Description: Surface-mounted double two-pole socket made of impact-resistant halogen-free thermoplastic that does not support combustion. Designed for use in AC electrical networks with a voltage of 230 V and a frequency of 50 Hz. Climate version OM, installation category 4, degree of protection IP20, IP44.

Double two-pole surface-mounted socket outlet	
Technical documentation (RMRS, RRR acceptance)	ИКАМ.23900.360076.018
Degree of protection	IP20, IP44
Flammability category	UL94 V0
Auto-ignition temperature	960°C
Enclosure material	thermoplastic
Cable diameter, mm	10-14
Voltage, V:	
- alternating current	230
Rated current, A	16 at 230 V
Earthing	earthing contact provided

Supply with acceptance:
- RMRS - RRR

Junction boxes
Metal junction boxes
Plug-in transformers
Push-button stations
Cam switches
Cam changeover switches
Cabin switches and sockets
Junction boxes with protection unit
Power boxes with protection unit
Interference suppression filters
Electromagnetic starters
AC UPS
DC UPS
Media server

Junction boxes with protective unit

Order table

КС3Б - XX XX ОМ1

- КС3Б — box designation (junction box with protection units)
- XX — rated current:
  - 2 - 2A
  - 6 - 6A
  - 10 - 10A
  - 20 - 20A
- XX — version:
  - 02 - 2 cable glands
  - 03 - 3 cable glands
- ОМ1 — climatic version

Junction boxes with protection units are designed for protection against overloads and short circuits in individual DC circuits up to 20A, with voltage up to 30V for installation on ships, vessels and floating craft of unrestricted navigation area.

Example of entry in design documentation and when ordering a box with rated current 20A fuse links, with three cable glands, for unrestricted navigation area:

Box КС3Б-20.03.ОМ1

Degree of protection: IP56 per GOST 14254-96.
ОМ climatic version, installation category 1 per GOST 15150-69.
The boxes comply with OST 5.6098-77.

Certificates:
- RMRS
- RRR

Junction box with protection unit КС3Б

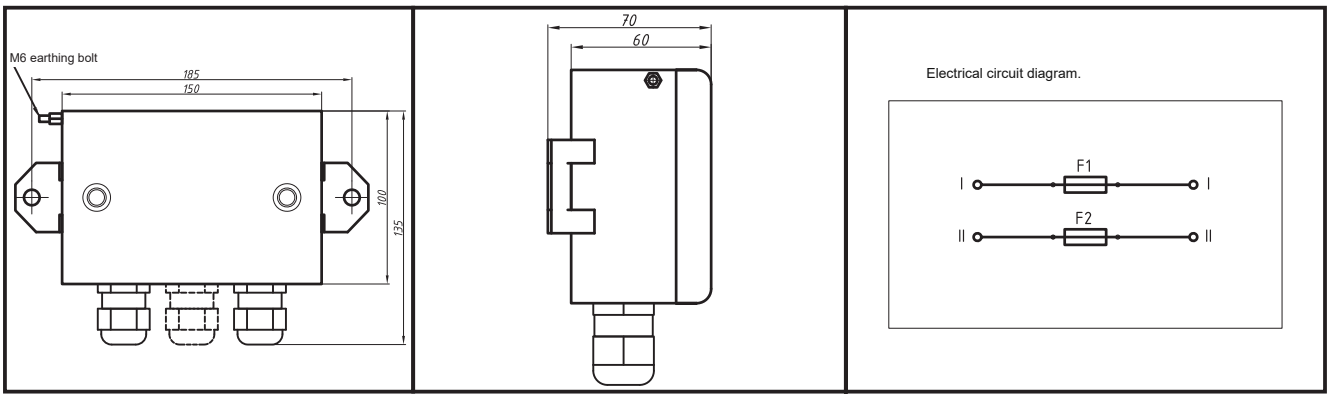

Description: Junction boxes with protective units are intended to protect individual DC electrical circuits up to 20 A and up to 30 V against overloads and short circuits, for installation on ships, vessels and watercraft with unrestricted service area. OM climatic version, installation category 1, IP56 degree of protection, for installation on open decks (including vessels with unrestricted service area), as well as in indoor damp and dry spaces.

	КС3Б
Technical documentation	ОСТ 5.6098-77 VC324/КС3Б-01-001
Degree of protection	IP56
Enclosure material	steel, stainless steel
Cable gland material	thermoplastic, brass
Number of cable glands	2, 3
Cable diameter, mm	8-16
Fuse setting, A	2, 6, 10, 20
Voltage, V:	
- direct current	30
Mass, kg	0,50

*Note:

1. For open decks of vessels operated under marine conditions, use an enclosure made of stainless steel (to be specified when ordering).
2. Manufacture with a cable entry of a different diameter is possible (6-12, 10-14, 8-16, 13-18 mm). (to be specified when ordering):
КС3Б-20.03.ОМ1, box with 20A rated fuse-link current, with three cable glands, in stainless steel enclosure, cable entry 13-18 mm.

Certificates:
- RMRS
- RRR

Junction boxes
Metal junction boxes
Plug-in transformers
Push-button stations
Cam switches
Cam changeover switches
Cabin switches and sockets
Junction boxes with protection unit
Power boxes with protection unit
Interference suppression filters
Electromagnetic starters
AC UPS
DC UPS
Media server

ЯС3Б power boxes with protective unit

Ordering table

ЯС3Б X - XX - 55 - ОМ3

- ЯС3Б — Designation (power box with protective unit)
- X — Number of fuses:
  2 – 2 fuses
  4 – 4 fuses
- XX — Rated current:
  20 - 20A
  40 - 40A
  50 - 50A
  63 - 63A
  80 - 80A
  100 - 100A
  125 - 125A
  160 - 160A
- 55 — Enclosure protection IP55
- ОМ3 — Climatic version

Power boxes with protection units are intended for protection against overloads and short circuits in individual electrical circuits with currents up to 160A and DC voltage up to 30V, for installation on ships, vessels and floating craft operating in unrestricted navigation areas.

Example of designation in design documentation and when ordering a box with a rated fuse-link current of 50 A, with four fuses, for installation in enclosed damp and dry spaces.:

ЯС3Б4-50-55-ОМ3 power box

Degree of protection IP55 GOST 14254-96 Climatic version - OM, installation category - 3 in accordance with GOST 1515069. Boxes comply with OST 5P.6083-98.

Certificates: -
RMRS - RRR

ЯС3Б power box with protection unit

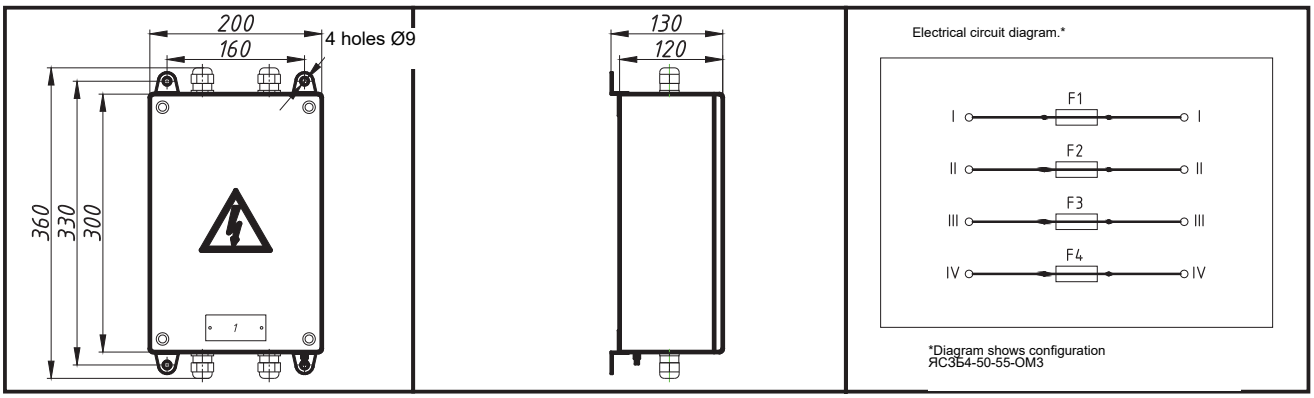

Description: Power boxes with protective units are intended to protect individual DC electrical circuits up to 160 A, with voltage up to 30 V, against overloads and short circuits, for installation on ships and vessels of unrestricted navigation area. Climatic version OM, placement category 5, degree of protection IP55, for installation in enclosed damp and dry spaces.

		ЯС3Б
Technical documentation		ОСТ 5Р.6083-98 VC/ЯС3Б-01-001
Degree of protection		IP55
Enclosure material	steel	
Cable gland material	thermoplastic	
Number of cable glands		4
Cable diameter, mm		8-16
Number of fuses		2, 4
Fuse rating, A		20, 40, 50, 63, 80, 100, 125, 160
Voltage, V:		
- direct current		30
Mass, kg		2,5
*Note: 1. Other cable entry diameters can be manufactured (6–12, 11–17, 15–21, 19–28, 27–38, 34–44 mm) (specify when ordering): ЯС3Б2-20-55-ОМ3, box with fuse links rated at 20 A, with two fuses, stainless steel housing, cable entry 11–17 mm.		

Certificates: -
RMRS - RRR

Junction boxes
Metal junction boxes
Plug-in transformers
Push-button stations
Cam switches
Cam changeover switches
Cabin switches and sockets
Junction boxes with protection unit
Power boxes with protection unit
Interference suppression filters
Electromagnetic starters
AC UPS
DC UPS
Media server

Junction boxes
Metal junction boxes
Plug-in transformers
Push-button stations
Cam switches
Cam changeover switches
Cabin switches and sockets
Junction boxes with protection unit
Power boxes with protection unit
Interference suppression filters
Electromagnetic starters
AC UPS
DC UPS
Media server

EMI suppression filters

ФЕ-110-380Т interference suppression filter

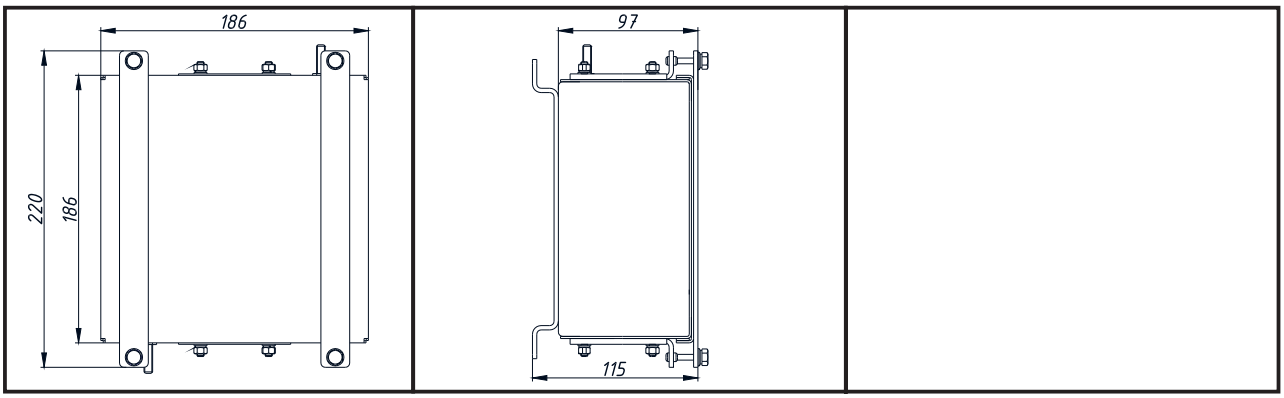

Description: Capacitive interference suppression filters are intended for suppressing interference in two- and three-wire shipboard DC and AC networks at frequencies of 50 and 400 Hz, currents up to 110A, and voltages up to 380V, for installation on ships and vessels operating without navigation area restrictions. Climate version OM, installation category 1, degree of protection IP66. Enclosures are manufactured from both magnetic and low-magnetic (stainless steel) materials. The filter operating frequency range is 0.16-150MHz.

Three-wire capacitive filter Two-wire capacitive filter	**ФЕ-110-380Т** **ФЕ-110-380Д**
Technical documentation	ОСТ 5Р.8339-81 VC324/ФЕ-63-001
Degree of protection	IP66
Enclosure material	steel, stainless steel
Number of cable entries	2
Cable diameter, mm	Up to 40
Cable connection stud diameter, mm	8
Current, A	110
Voltage, V:	
- alternating current	380
- direct current	380
Frequency range, MHz	0,16-150
Mass, kg	2,6

Certificates: -
RMRS - RRR

Junction boxes
Metal junction boxes
Plug-in transformers
Push-button stations
Cam switches
Cam changeover switches
Cabin switches and sockets
Junction boxes with protection unit
Power boxes with protection unit
Interference suppression filters
Electromagnetic starters
AC UPS
DC UPS
Media server

Electromagnetic starters

Electromagnetic starters, ПМС series

Description:

ПМС series electromagnetic starters are designed for use both on vessels and in other electrical installations.

Starters are designed:

- for direct starting and stopping of AC electric motors;
- for direct starting, stopping and reversing;
- for starting with switching of motor windings from “star” to “delta”, as well as protection against overload by means of an electrothermal current relay with temperature compensation, minimum-voltage and no-voltage protection of three-phase squirrel-cage asynchronous electric motors with short-circuited rotor.

Climate version OM, installation categories 1, 3 and 4 for installation in indoor spaces and on an open deck, including vessels of unrestricted navigation area.

Main parameters:

1. By purpose, starters are manufactured as non-reversing and reversing; non-reversing with winding switching from “star” to “delta”.
2. By degree of protection - IP23, IP55 and IP56.
3. By availability of motor protection device - with electrothermal current relay.
4. By availability of built-in control elements:
   - without control elements;
   - with load switch without control elements;
   - with control push-buttons;
   - with control push-buttons and load switch;
   - with control push-buttons and selector switch;
   - with control push-buttons, load switch and selector switch.
5. By availability of built-in ammeter:
   - without ammeter;
   - with ammeter (only in IP23 degree-of-protection version).
6. Rated voltage: the starters operate on 220 V or 380 V AC at 50 Hz.
7. Rated currents of the starter and adjustment ranges of the rated current of the thermal relay are given in Table 1. Starters are supplied with the setting in the position corresponding to rated current.
8. Indication: indicator lamps show the ON state and the presence of voltage in the control circuit.
9. By type of interlock in reversing starters - with electrical interlock.

Note: for open decks of vessels operated under marine conditions, use stainless steel enclosure (to be specified when ordering).

Technical documentation: RMRS/RRR acceptance — БКЦ-002ТУ; VP acceptance — ТУ БКЦ-002В.

Schematic electrical diagrams are provided in Appendix 1.

Supply with acceptance:

- RMRS
- RRR
- VP

Junction boxes
Metal junction boxes
Plug transformers
Push-button stations
Cam switches
Cam selector switches
Cabin switches and sockets
Junction boxes with protection unit
Power boxes with protection unit
Interference suppression filters
Electromagnetic starters
AC UPS
DC UPS
Media server

Rated starter currents:

Starter size	Rated current at temperatures up to +55°C, A	Thermal overload relay setting range
1	0,13	0,10 – 0,13
	0,17	0,13 – 0,17
	0,23	0,17 – 0,23
	0,31	0,23– 0,31
	0,41	0,31 – 0,41
	0,55	0,41 – 0,55
	0,74	0,55 – 0,74
	1,00	0,74 – 1,00
	1,30	1,00 – 1,30
	1,70	1,30 – 1,70
	2,30	1,70 – 2,30
	3,10	2,30 – 3,10
	4,20	3,10 - 4,20
	5,70	4,20 - 5,70
	7,60	5,70 - 7,60
	10	7,60 - 10
	13	10 - 13
	16	13 - 16
2	20	16 - 20
	24	20 - 24
	29	24 - 29

Starter size	Rated current at temperatures up to +55°C, A	Thermal overload relay setting range
3	35	29 - 35
	38	35 - 38
	42	29 - 42
	52	36 – 52
	63	45 – 63
4	63	45 – 63
	80	60 – 80
	90	65 – 90
	110	80 – 110
5	135	100 – 135
	150	110 - 150
	175	130 – 175
	200	150 – 200
	235	165 – 235
	250	220 - 250

Supply with acceptance:
- RMRS
- RRR
- VP

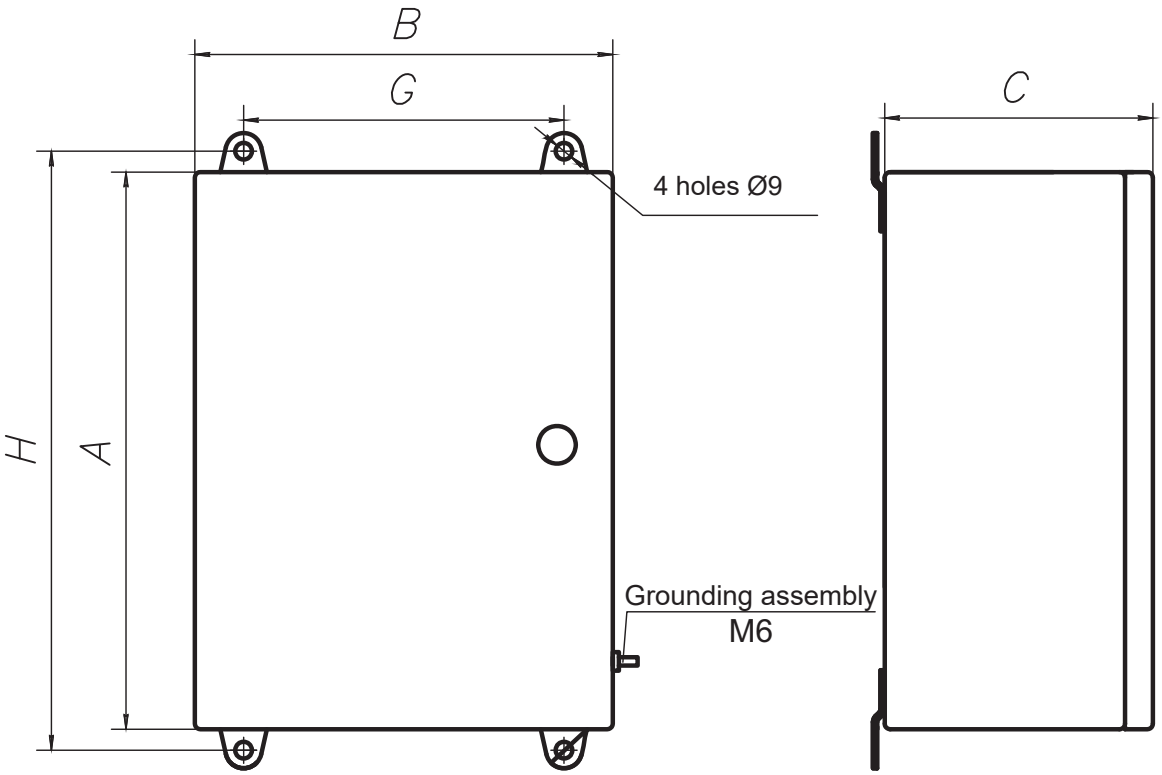

Starter size	Dimensions, mm					Mass, kg
	A	B	C	G	H	
non-reversing						
1	300	300	150	263	437	10
2	400	300	200	263	437	10
3	400	300	200	263	437	13
4	400	300	200	263	437	18
reversing						
1	400	300	150	263	437	11
2	400	300	200	263	437	11
3	400	300	200	263	437	16
4	500	400	200	363	537	28
“star” – “delta”						
1	400	300	150	263	437	14
2	400	300	200	263	437	15
3	500	400	200	363	537	27
4	500	400	200	363	537	30

Structure of the ПМС starter designation:

ПМС X - X X X X X - ОМХ - X

- Starter type: ПМС
- Rated voltage:
  1 - 220 V, 50 Hz;
  2 - 380 V, 50 Hz
- Starter size:
  1, 2, 3, 4, 5
- Index for degree of protection:
  3 - IP23
  5 - IP55 (without ammeter)
  6 - IP56 (without ammeter)
- Version by purpose:
  1 - non-reversing;
  2 - reversing;
  3 - non-reversing, with winding switching from “star” to “delta”
- Index for availability of control elements:
  0 - without control elements;
  1 - with load switch without control elements;
  2 - with control push-buttons;
  3 - with control push-buttons and load switch;
  4 - with control push-buttons and selector switch;
  5 - with control push-buttons, load switch and selector switch
- Index for additional elements:
  A - with ammeter;
  No index — without ammeter
- OM climatic version, installation categories 1, 3, 4
- Rated current (see table)

Supply with acceptance:
- RMRS
- RRR
- VP

Junction boxes
Metal junction boxes
Plug-in transformers
Push-button stations
Cam switches
Cam changeover switches
Cabin switches and sockets
Junction boxes with protection unit
Power boxes with protection unit
Interference suppression filters
Electromagnetic starters
AC UPS
DC UPS
Media server

AC uninterruptible power supplies

Ordering table

Order-code structure:

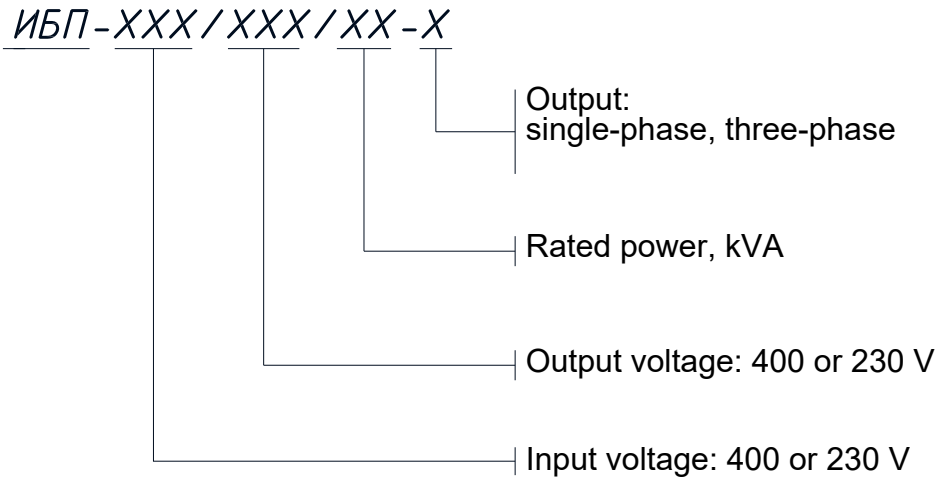

UPS units are used for automatic charging of storage batteries and as a source of alternating sinusoidal current for uninterruptible power supply to consumers with a voltage of 230 V, 50 Hz or 400 V, 50 Hz. Designed for installation on ships, vessels and floating craft operating in an unrestricted navigation area.

Example of designation in design documentation and when ordering a 10 kVA UPS with three-phase 230 V, 50 Hz input and output voltage:

ИБП-230/230/10-3, ТУ ИКАМ.436116.001

Degree of protection IP43 in accordance with GOST 14254. Climatic version OM, installation category 4 in accordance with GOST 15150.

Certificates: -
RMRS - RRR

AC uninterruptible power supplies

Model	Overall and mounting dimensions
ИБП-400/230/05-3	Figure A.1
ИБП-400/230/10-3	Figure A.1
ИБП-400/230/15-3	Figure A.1
ИБП-400/230/20-3	Figure A.2
ИБП-400/230/25-3	Figure A.3
ИБП-400/230/30-3	Figure A.3
ИБП-400/400/05-3	Figure A.1
ИБП-400/400/10-3	Figure A.1
ИБП-400/400/15-3	Figure A.1
ИБП-400/400/20-3	Figure A.2
ИБП-400/400/25-3	Figure A.3
ИБП-400/400/30-3	Figure A.3
ИБП-230/230/05-3	Figure A.1
ИБП-230/230/10-3	Figure A.1
ИБП-230/230/15-3	Figure A.1
ИБП-230/230/20-3	Figure A.2
ИБП-230/230/25-3	Figure A.3
ИБП-230/230/30-3	Figure A.3
ИБП-230/230/05-1	Figure A.4
ИБП-230/230/10-1	Figure A.1
ИБП-230/230/10-1	Figure A.1

	UPS 400/230V
Technical documentation	ТУ ИКАМ.436116.001
Degree of protection	IP43
Enclosure material	steel
Cable entry direction	from below
Rated output power, kVA	5, 10, 15, 20, 25, 30
Output	single-phase, three-phase
Input voltage, V:	
- alternating current	400, 230
Output voltage, V:	
- alternating current	400, 230
UPS battery runtime at rated power, min	30
Mass, kg	800...2600

*Note:
Products with other protection ratings, power ratings and supply voltages may be manufactured to order.

Certificates: -
RMRS - RRR

Junction boxes
Metal junction boxes
Plug-in transformers
Push-button stations
Cam switches
Cam changeover switches
Cabin switches and sockets
Junction boxes with protection unit
Power boxes with protection unit
Interference suppression filters
Electromagnetic starters
AC UPS
DC UPS
Media server

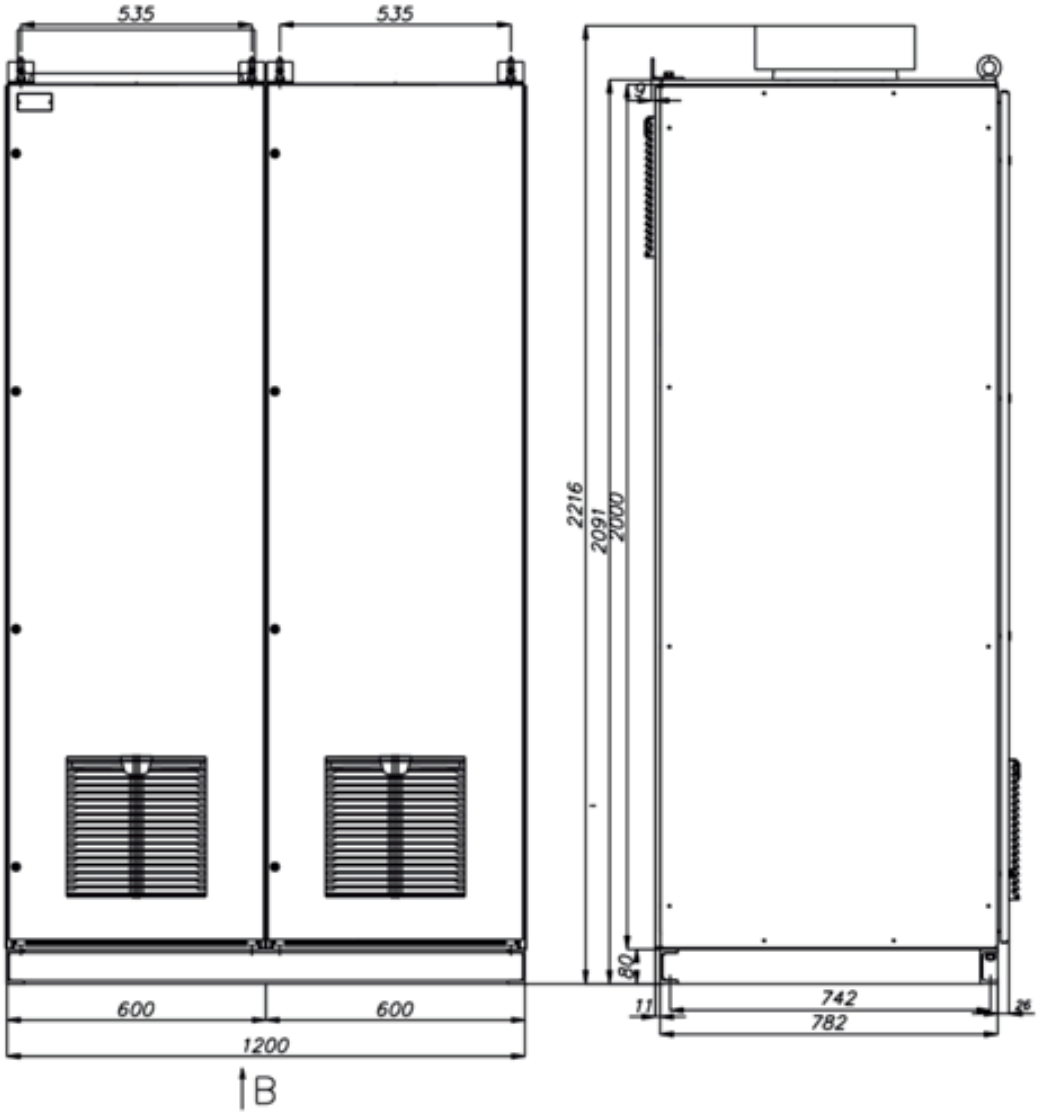

View B

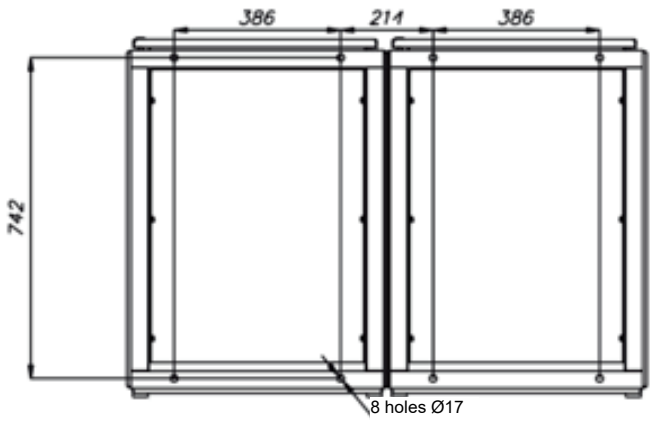

Figure A.1

Certificates: -
RMRS - RRR

Junction boxes
Metal junction boxes
Plug-in transformers
Push-button stations
Cam switches
Cam changeover switches
Cabin switches and sockets
Junction boxes with protection unit
Power boxes with protection unit
Interference suppression filters
Electromagnetic starters
AC UPS
DC UPS
Media server

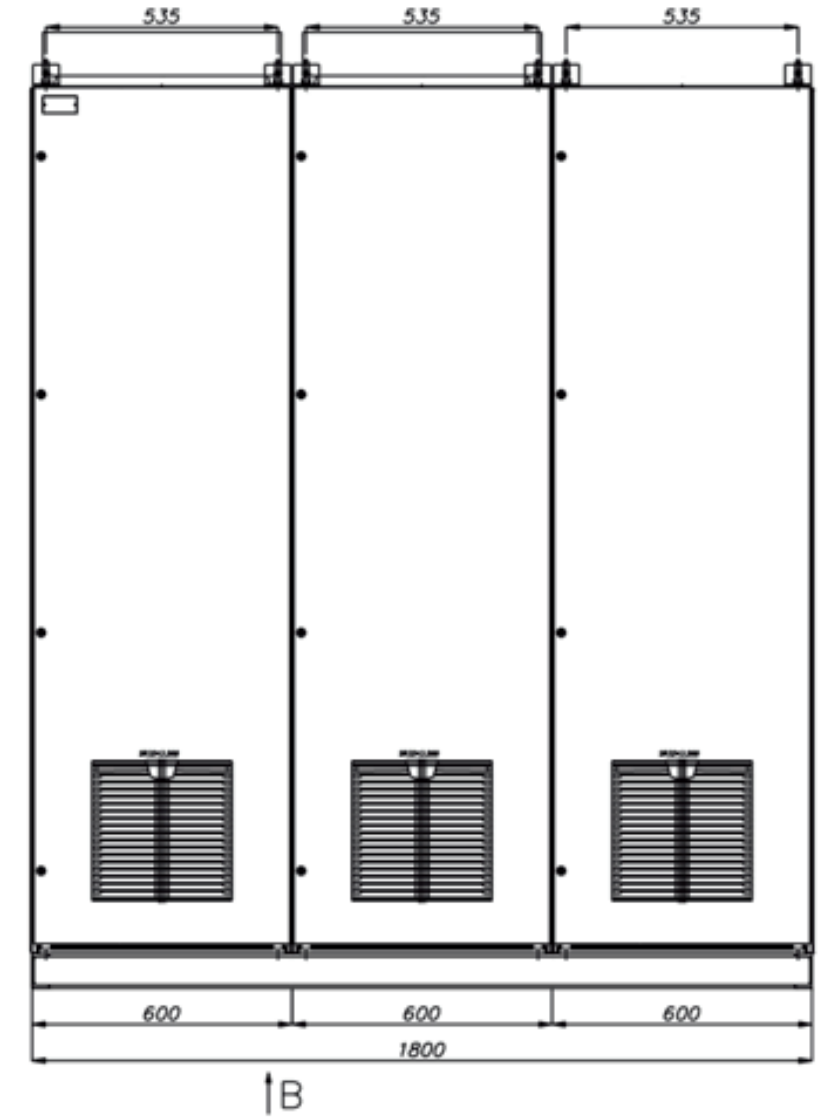

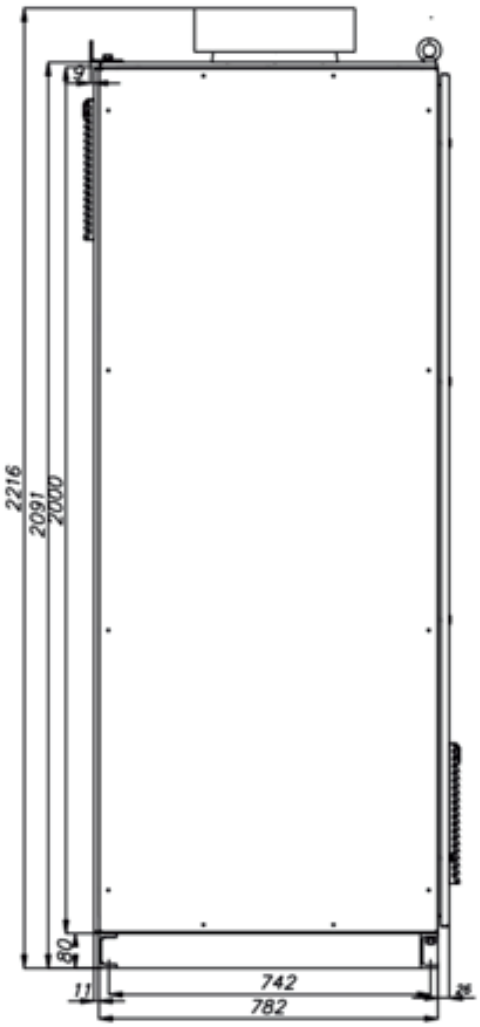

View B

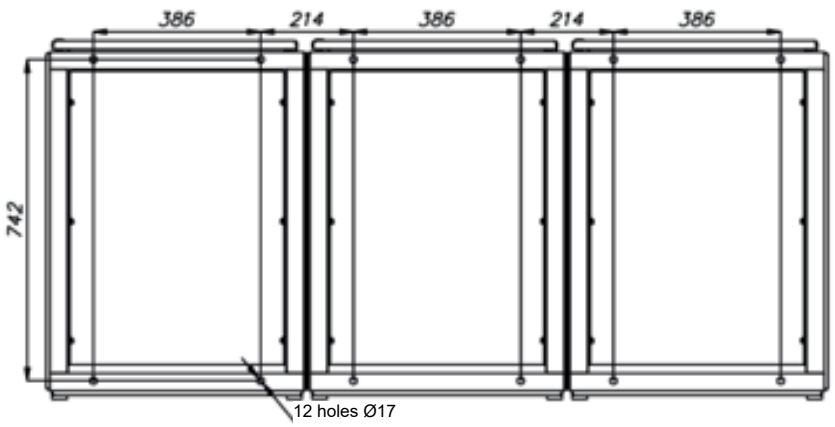

Figure A.2

Junction boxes
Metal junction boxes
Plug-in transformers
Push-button stations
Cam switches
Cam changeover switches
Cabin switches and sockets
Junction boxes with protection unit
Power boxes with protection unit
Interference suppression filters
Electromagnetic starters
AC UPS
DC UPS
Media server

Certificates: -
RMRS - RRR

Junction boxes
Metal junction boxes
Plug-in transformers
Push-button stations
Cam switches
Cam changeover switches
Cabin switches and sockets
Junction boxes with protection unit
Power boxes with protection unit
Interference suppression filters
Electromagnetic starters
AC UPS
DC UPS
Media server

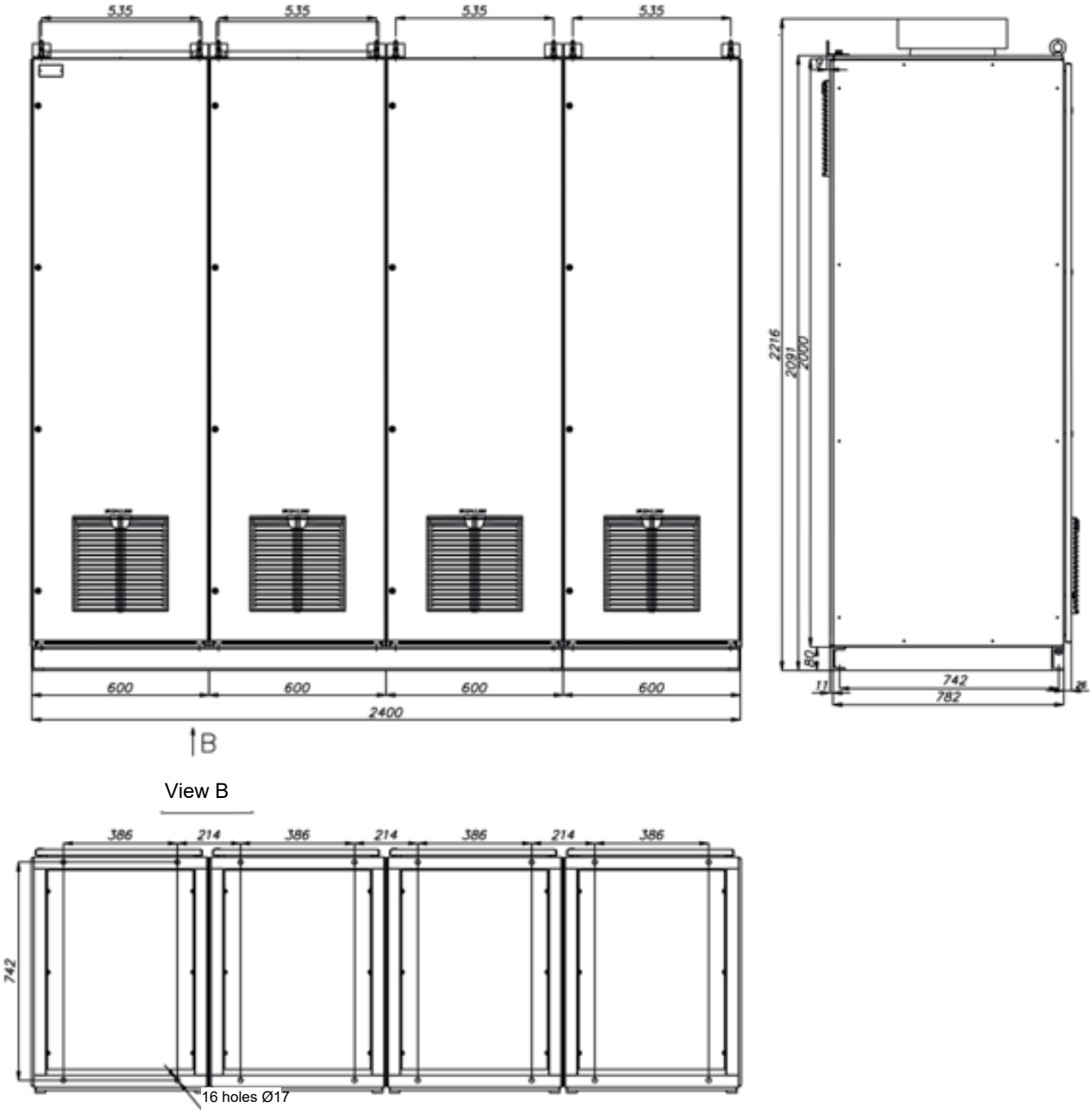

Figure A.3

Certificates: -
RMRS - RRR

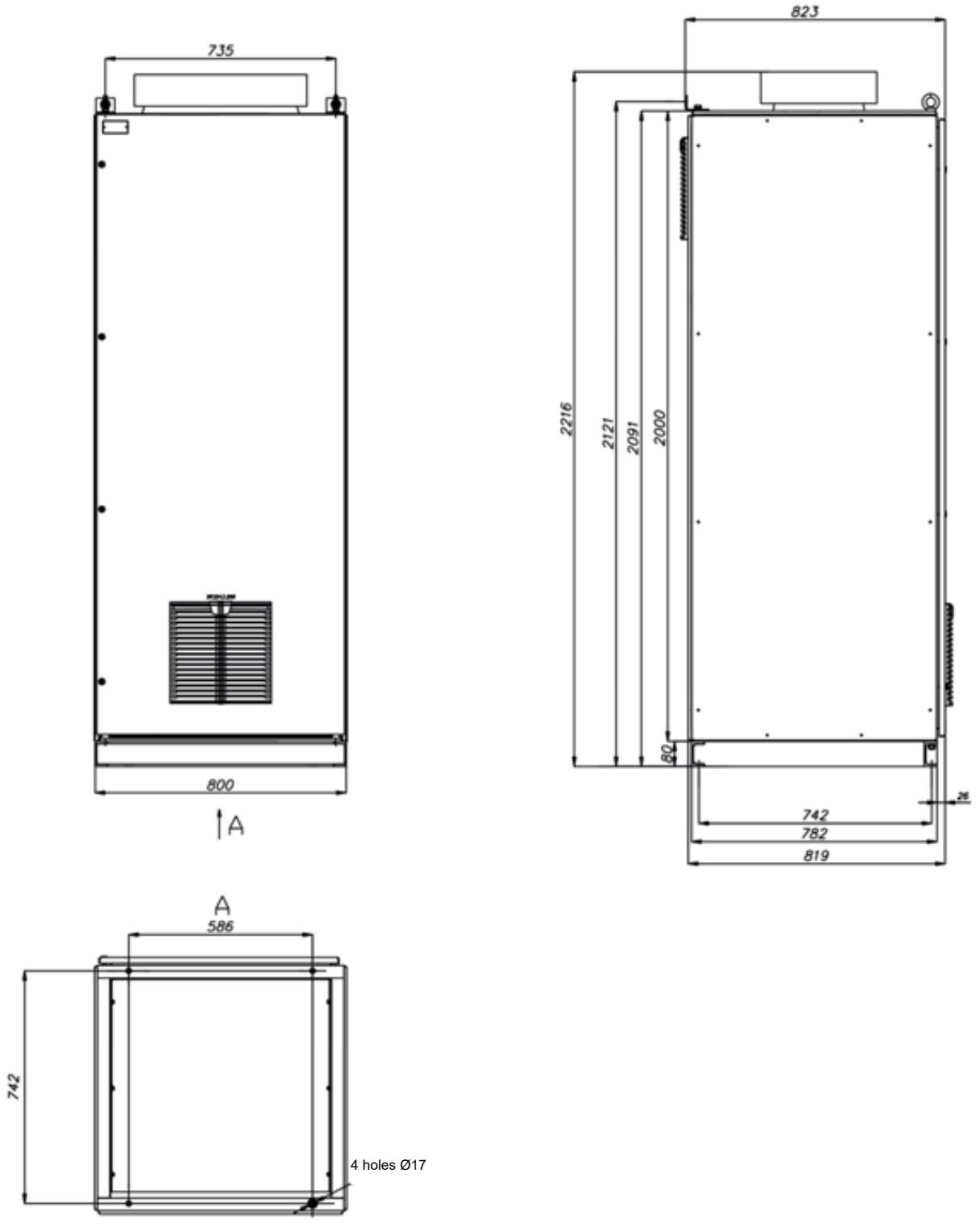

Figure A.4

Certificates: -
RMRS - RRR

Connection diagrams

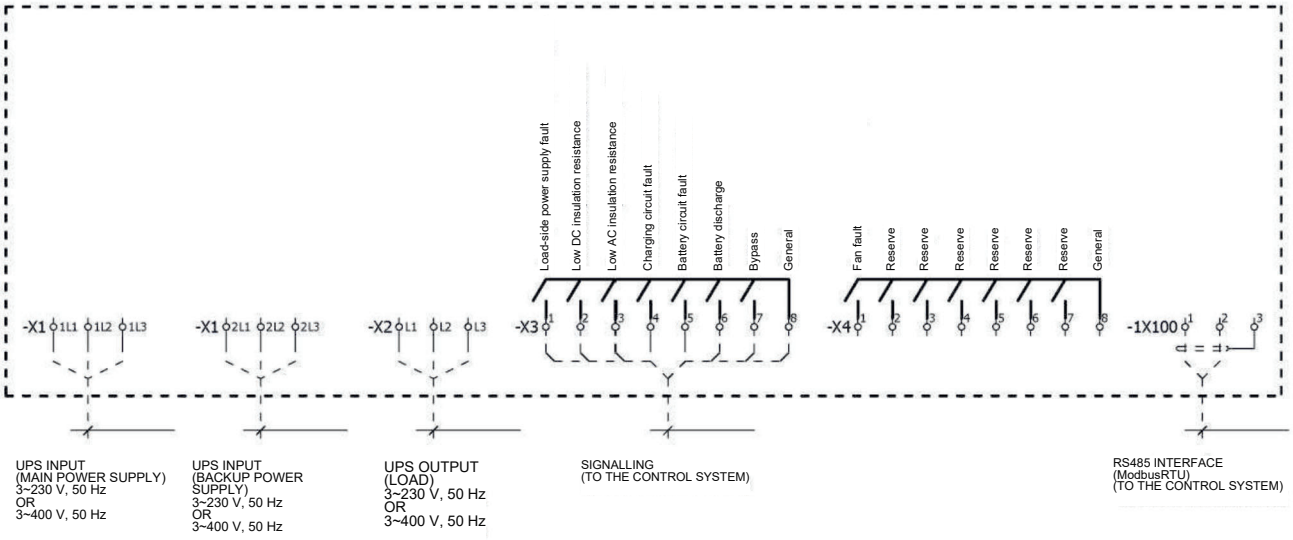

ИБП-400/400/XX-3, ИБП-400/230/XX-3 and ИБП-230/230/XX-3.

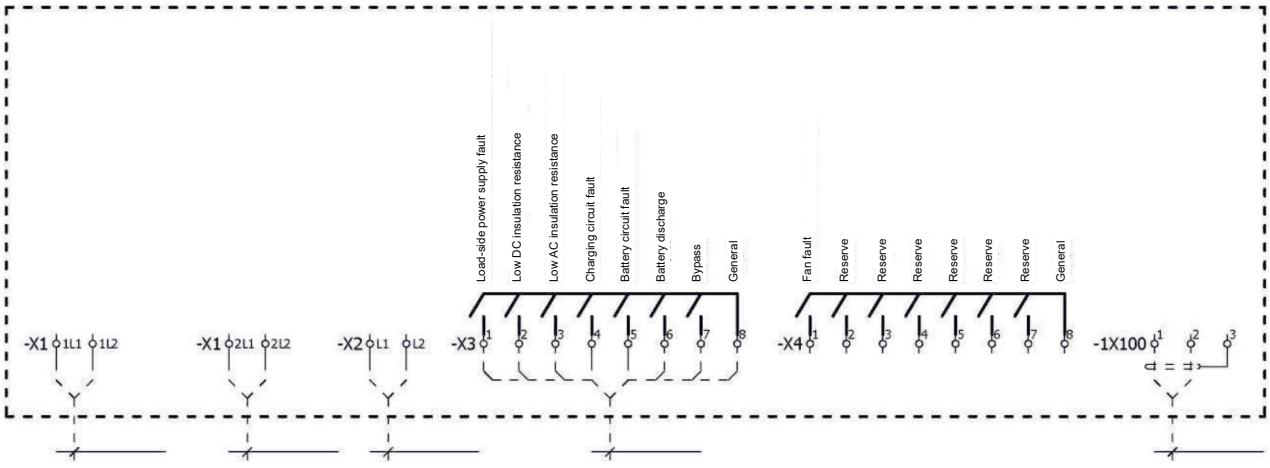

ИБП-230/230/XX-1

Certificates: -
RMRS - RRR

Junction boxes
Metal junction boxes
Plug-in transformers
Push-button stations
Cam switches
Cam changeover switches
Cabin switches and sockets
Junction boxes with protection unit
Power boxes with protection unit
Interference suppression filters
Electromagnetic starters
AC UPS
DC UPS
Media server

DC uninterruptible power supplies

Ordering table

Order-code structure:

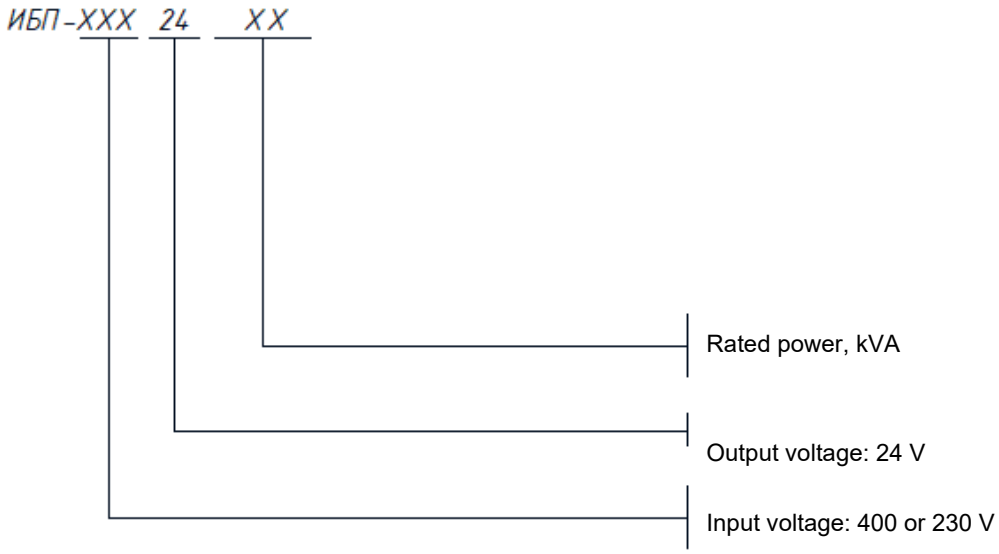

UPS units are used for automatic charging of storage batteries and as a direct current source for uninterruptible power supply to consumers with a voltage of 24 V. Designed for installation on ships, vessels and floating craft operating in an unrestricted navigation area.

Example of designation in design documentation and when ordering a 10 kVA UPS with three-phase 230 V, 50 Hz input and output voltage:

ИБП-230/24/10, ТУ ИКАМ.436116.002

Degree of protection IP43 in accordance with GOST 14254. Climatic version OM, installation category 4 in accordance with GOST 15150.

Certificates: -
RMRS - RRR

DC uninterruptible power supply

Model	Overall and mounting dimensions
ИБП-230/24/1.2	Figure A.1
ИБП-230/24/2.4	Figure A.2
ИБП-400/24/1.2	Figure A.1
ИБП-400/24/2.4	Figure A.2
ИБП-230/24/3.6	Figure A.3
ИБП-230/24/4.8	Figure A.4
ИБП-400/24/3.6	Figure A.3
ИБП-400/24/4.8	Figure A.4

	UPS 24
Technical documentation	ТУ ИКАМ.436116.002
Degree of protection	IP43
Enclosure material	steel
Cable entry direction	from below
Rated output power, kVA	1.2,2.4,3.6,4.8
Output	single-phase, three-phase
Input voltage, V:	
- alternating current	400, 230
Output voltage, V:	
- direct current	24
UPS battery runtime at rated power, min	30
Mass, kg	220...775

*Note:
Products with other protection ratings, power ratings and supply voltages may be manufactured to order.

Certificates: -
RMRS - RRR

Junction boxes
Metal junction boxes
Plug-in transformers
Push-button stations
Cam switches
Cam changeover switches
Cabin switches and sockets
Junction boxes with protection unit
Power boxes with protection unit
Interference suppression filters
Electromagnetic starters
AC UPS
DC UPS
Media server

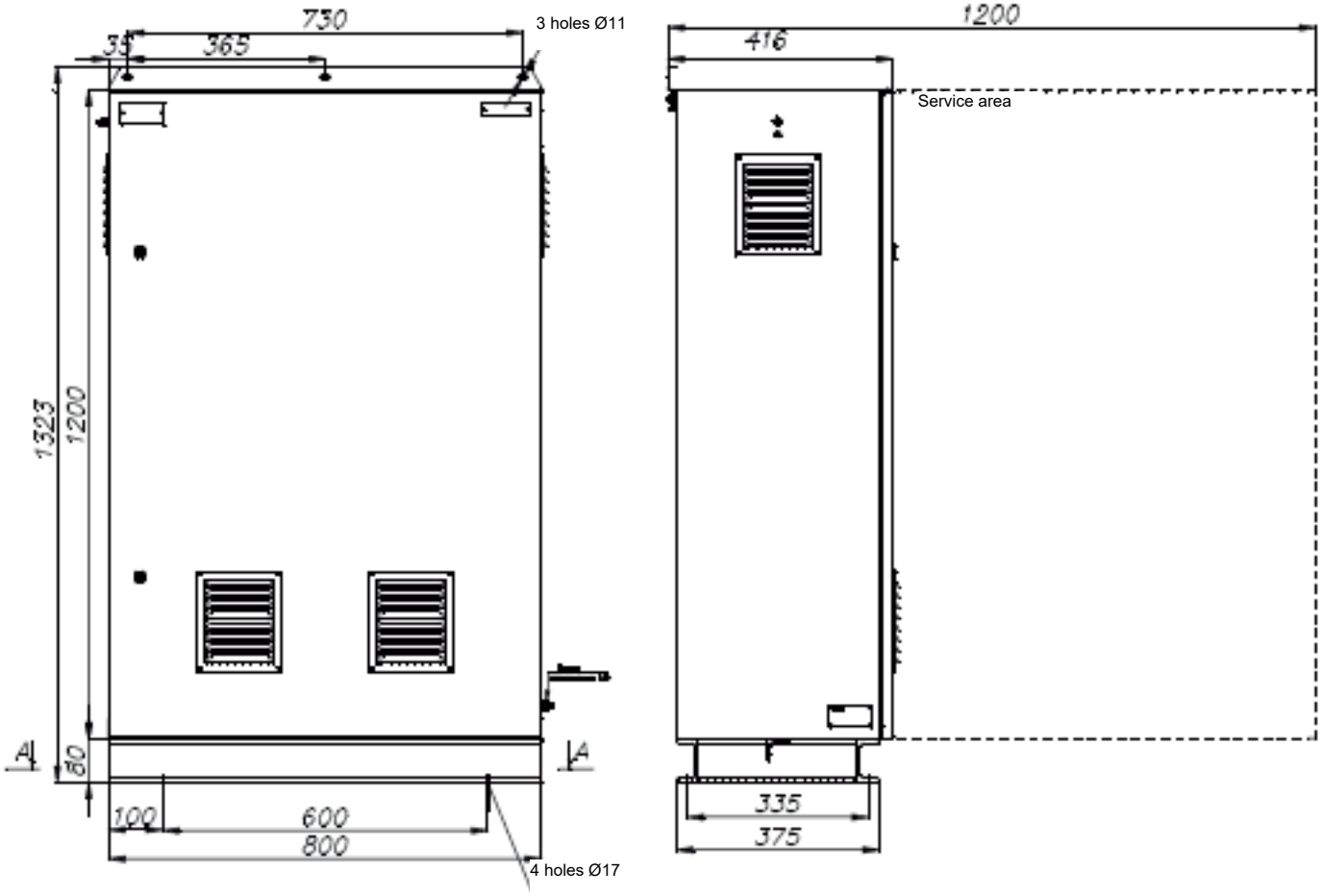

View A–A

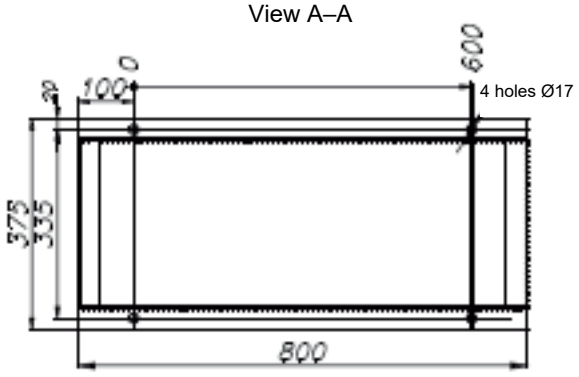

Figure A.1

Certificates: -
RMRS - RRR

Junction boxes
Metal junction boxes
Plug-in transformers
Push-button stations
Cam switches
Cam changeover switches
Cabin switches and sockets
Junction boxes with protection unit
Power boxes with protection unit
Interference suppression filters
Electromagnetic starters
AC UPS
DC UPS
Media server

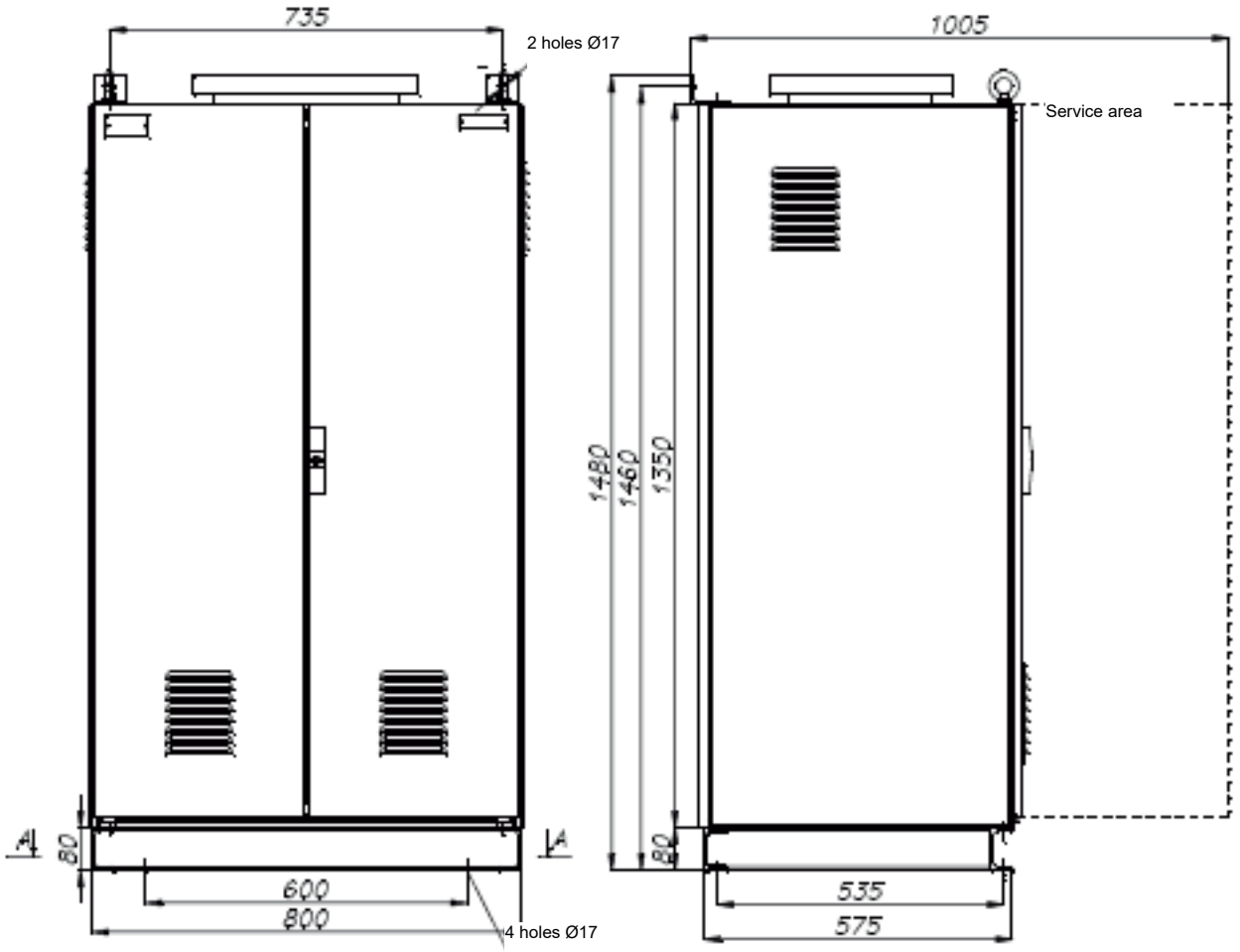

View A–A

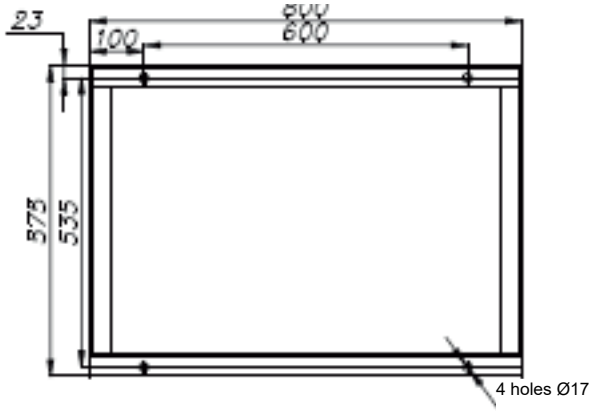

Figure A.2

Certificates: -
RMRS - RRR

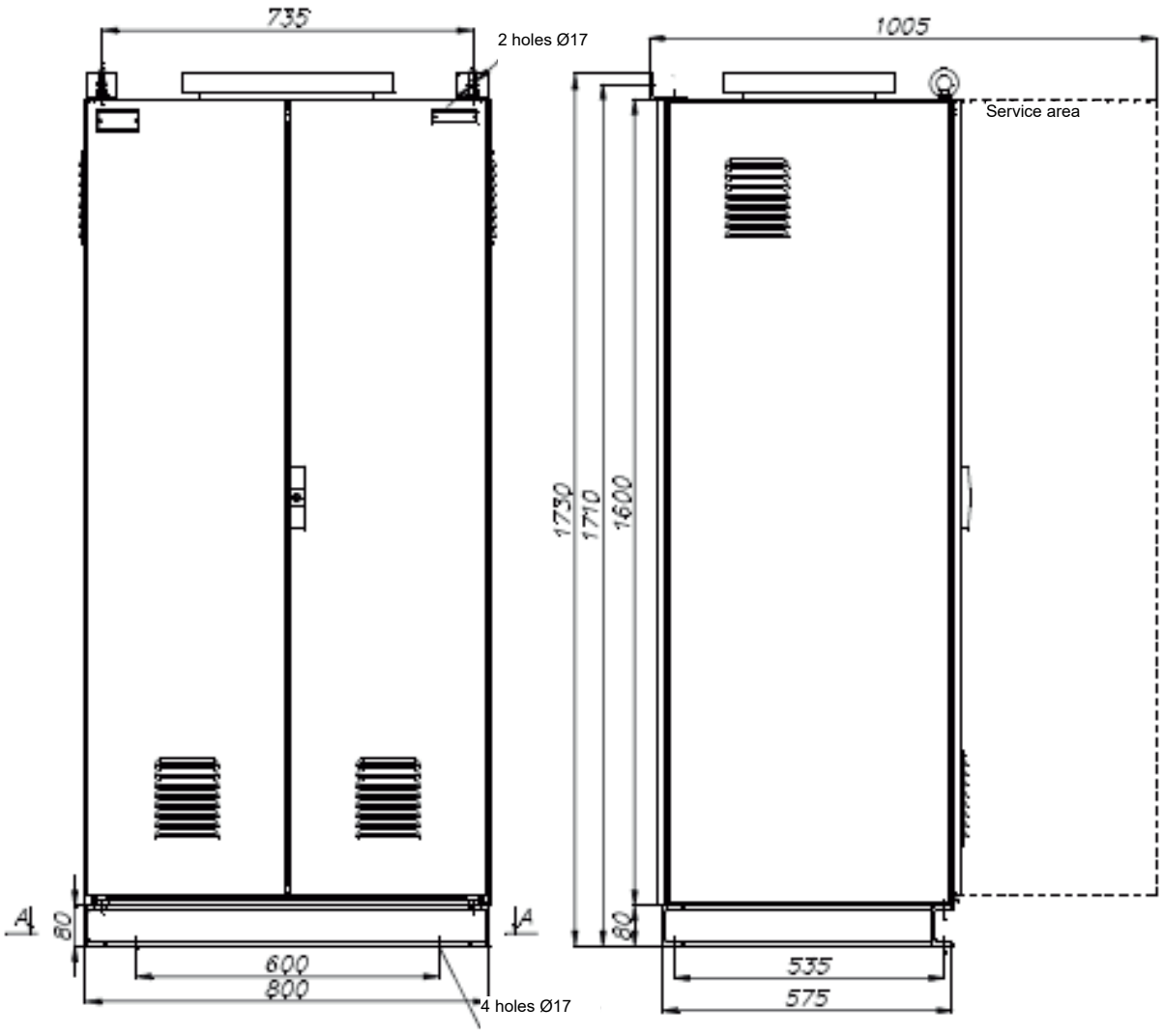

View A–A

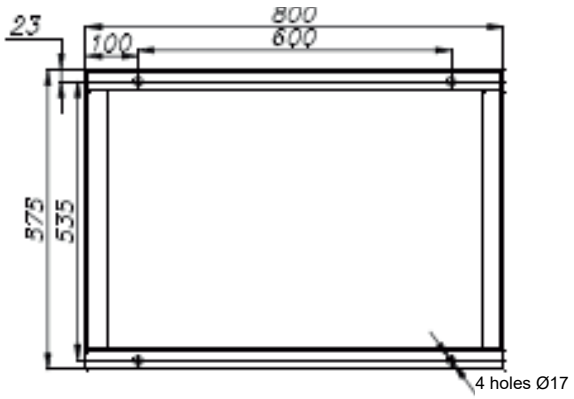

Figure A.3

Certificates: -
RMRS - RRR

Junction boxes
Metal junction boxes
Plug-in transformers
Push-button stations
Cam switches
Cam changeover switches
Cabin switches and sockets
Junction boxes with protection unit
Power boxes with protection unit
Interference suppression filters
Electromagnetic starters
AC UPS
DC UPS
Media server

Junction boxes
Metal junction boxes
Plug-in transformers
Push-button stations
Cam switches
Cam changeover switches
Cabin switches and sockets
Junction boxes with protection unit
Power boxes with protection unit
Interference suppression filters
Electromagnetic starters
AC UPS
DC UPS
Media server

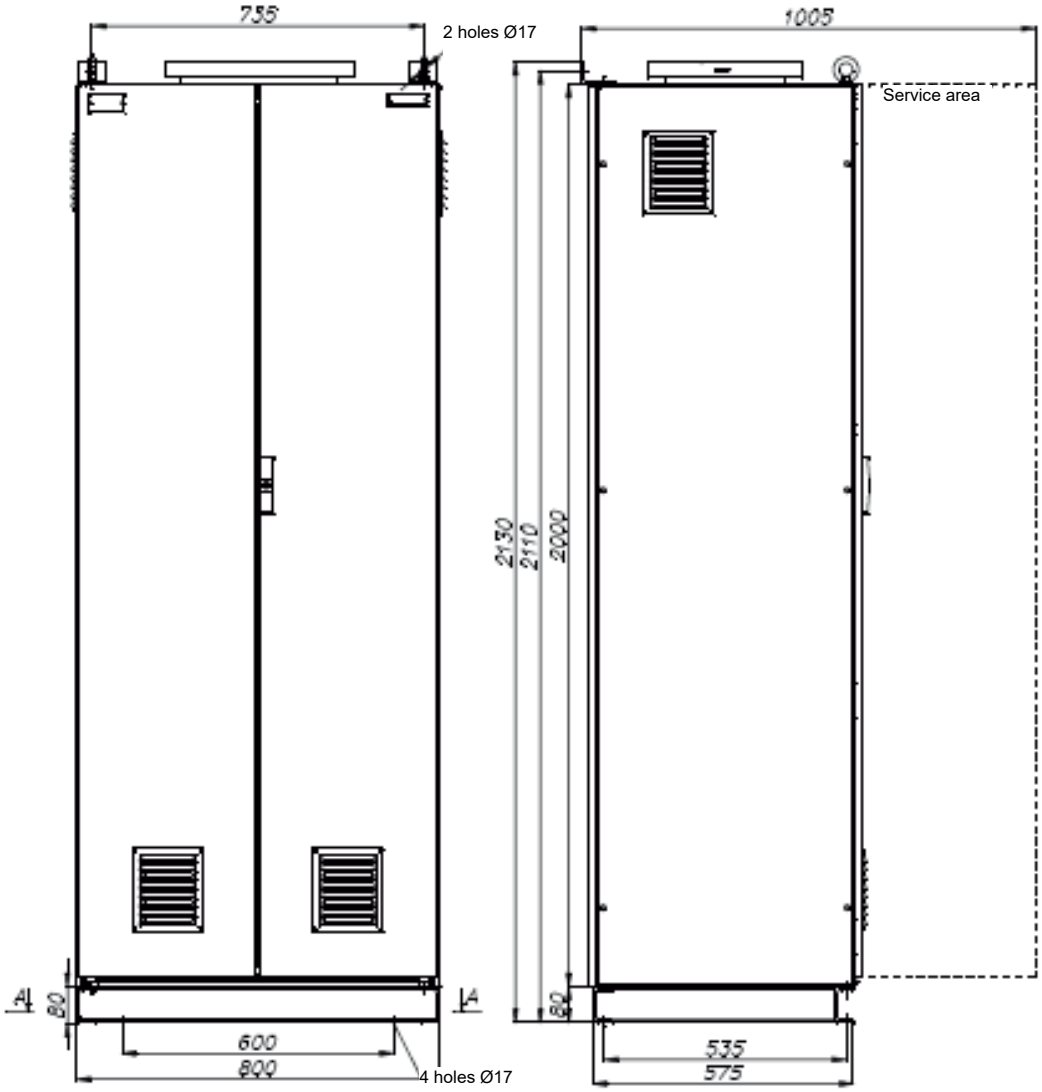

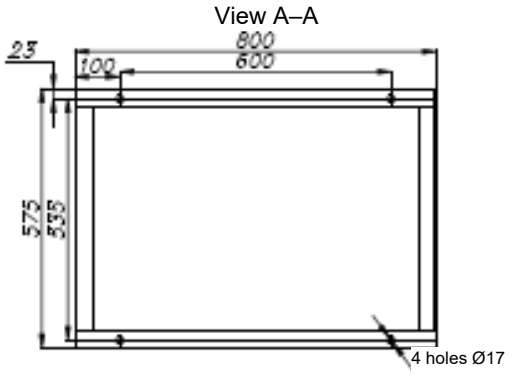

Figure A.4

Certificates: -
RMRS - RRR

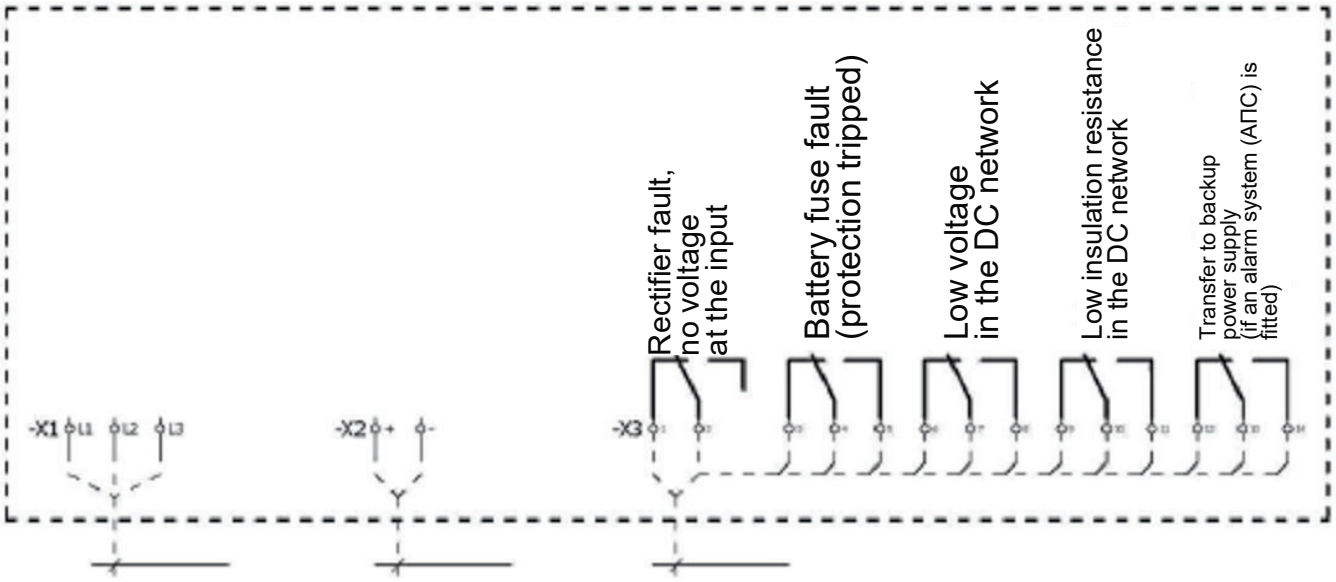

UPS Input (Power supply)
3~230V, 50Hz
OR
4~400V, 50Hz

UPS Output (Load)
24V DC

Signalling

Certificates: -
RMRS - RRR

Junction boxes
Metal junction boxes
Plug-in transformers
Push-button stations
Cam switches
Cam changeover switches
Cabin switches and sockets
Junction boxes with protection unit
Power boxes with protection unit
Interference suppression filters
Electromagnetic starters
AC UPS
DC UPS
Media server

Media server

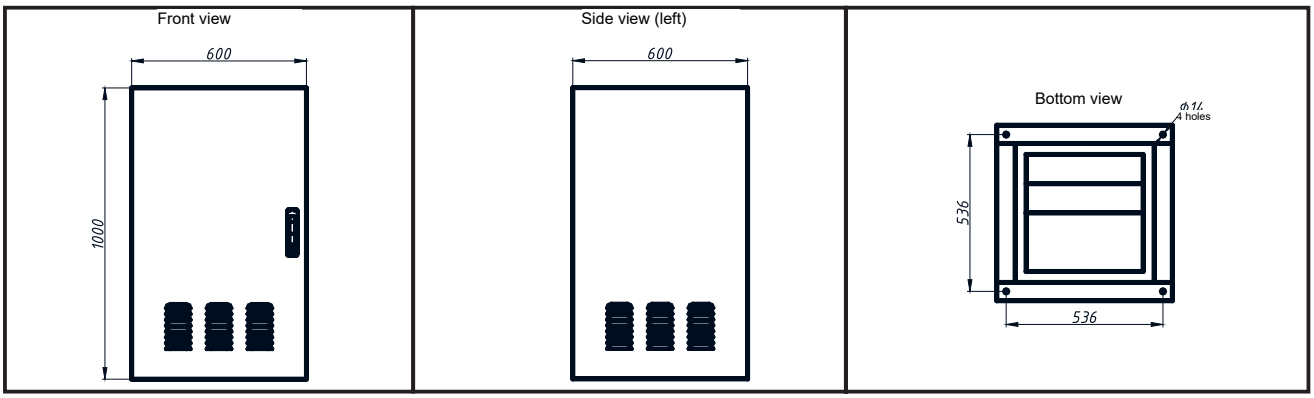

Description

The media server is intended for: - storing and streaming media content; - receiving and streaming images from shipboard video cameras; - receiving and streaming external sources (satellite and terrestrial TV, radio, etc.)

By type of current, rated voltage and frequency, the media server is manufactured as: - 24 V DC; - 230 V, 50 Hz single-phase AC.

Degree of protection IP20 GOST 14254-96. Climatic version - OM, installation category - 3 in accordance with GOST 1515069.

	Media Server
Technical documentation	ИКАМ.360269.611.03830-023
Degree of protection	IP20
Enclosure material	steel
Cable entry	from below
Cable diameter, mm	0,5-1,5
Voltage, V:	
- direct current	30
- alternating current	230
Mass, kg	124

Certificates: -
RMRS - RRR

Junction boxes
Metal junction boxes
Plug-in transformers
Push-button stations
Cam switches
Cam changeover switches
Cabin switches and sockets
Junction boxes with protection unit
Power boxes with protection unit
Interference suppression filters
Electromagnetic starters
AC UPS
DC UPS
Media server

Connection diagram

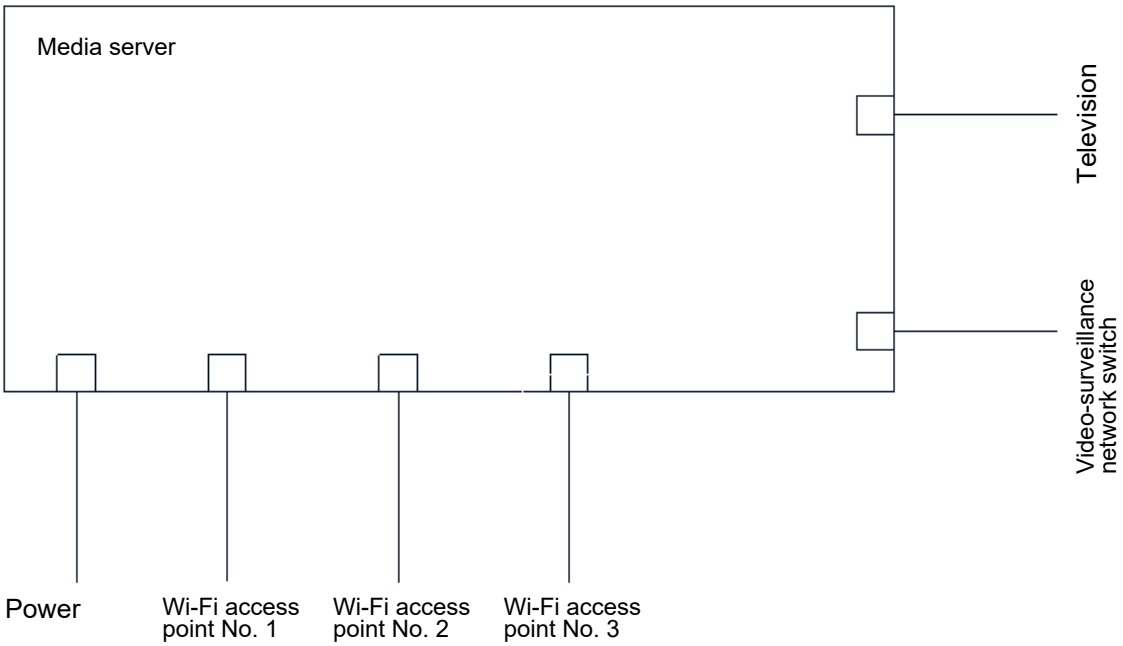

Note: The number of access points for the video surveillance system, WI-FI televisions, may be agreed upon when ordering.

Certificates: -
RMRS - RRR

VID Company LLC

Company "VID" Ltd

VID Company LLC

603163, Nizhny Novgorod,
Grebnoy Kanal Embankment, bldg. 6
Tel. (831) 435-18-25, +7(939) 801-30-78
www.vidnn.ru
info.vid@yandex.ru
avk33@yandex.ru

PRODUCT PHOTO INSCRIPTIONS

Source page / original label / translation

7	ООО «Компания «ВИД»	VID Company LLC
7	Коробка соединительная	Junction box
7	Год выпуска	Year of manufacture
36	Насос топливный	Fuel pump
36	1 Дист. 2 Мест.	1 Remote;2 Local
36	1 Мест. упр. 2 Дист. упр.	1 Local control;2 Remote control
36	Пост управления местный ASB3	Local control station ASB3
36	Насос технической воды	Service-water pump
36	Стоп	Stop
36	Пуск	Start
36	Грунтовый насос	Dredge pump
36	Выбирать	Haul in
36	Травить	Pay out
36	Подъем	Raise
36	Спуск	Lower
36	Пост управления местный ASB1	Local control station ASB1
36	Пост управления местный ASB2	Local control station ASB2

Unreadable or partly hidden source values remain unchanged in the original photographs.